VEP and VES
Turflow Heat Exchangers

Description

The Turflow heat exchanger range is a shell & tube design consisting of straight corrugated tubes within a shell. The tubes are secured at either end of the shell by fixed tube sheets.
The corrugated tube design promotes increased turbulent flow conditions to provide the Turflow's high heat transfer efficiency.
The shell incorporates a bellows type expansion joint that ensures thermal stress does not damage the heat exchanger. The shell is also fitted with drain and vent connections. The heat exchanger is a gasket free design constructed wholly from stainless steel.
Normally the heated fluid will flow through the tubes and the heating medium will be in the shell; both countercurrent and concurrent flow paths can be accommodated, inclusive of horizontal or vertical installation.

Standards
Turflow type heat exchangers fully comply with the requirements of the European Pressure Equipment Directive 97/23/EC and carry the CE mark when so required. All units are supplied with a Declaration of Conformity.

Certification
A manufacturer's Hydraulic Test Report and Material Certification documentation is available on request.
Note: All certification/ inspection requirements must be stated at the time of order placement.

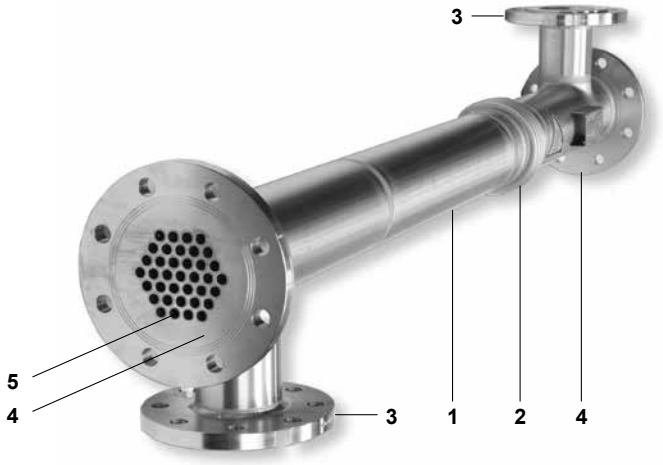

Pressure / temperature limits

PMA	Shell /Tube side	-10°C to 200°C	12 bar g
		200°C to 300°C	6 bar g
		This option is to be specified at the time of order placement.	
TMA	Shell /Tube side	12 bar g	-10°C to 200°C
		6 bar g	200°C to 300°C
		This option is to be specified at the time of order placement.	
Maximum cold hydraulic test pressure of:			18 bar g for both shell and tube sides

Turflow type heat exchangers

The **VEP** design is fitted with small diameter tubes

The **VES** design is fitted with large diameter tubes

Please contact Spirax Sarco for advice regarding selection – The most suitable unit will be selected by Spirax Sarco and will be specific for the given application.

Materials

No.	Part		Material	
1	Shell		Stainless steel	ASTM A312 – TP304
2	Expansion joint		Stainless steel	ASTM A240 – TP321
3	Shell side flanges		Stainless steel	ASTM A182 F304
4	Tube sheets / tube side flanges (Different options available according to the specific model)	SX	Stainless steel 316	ASTM A182 F316
		SS	Stainless steel 304	ASTM A182 F304
5	Corrugated tubes (Different options available according to the specific model)		Stainless steel	ASTM A249-TP316L
			Stainless steel	ASTM A249-TP304

Sizes and end connections

Type	Shell length (metres)	Shell Ø	Connections
VEP	0.6, 1, 1.5 and 2 *	1½", 2", 3" 4", 5", 6", 8" and 10"	Flanged EN 1092 PN16 or ASME B16.5 Class 150
VES	1, 2 and 3	2", 3" 4", 5", 6", 8" and 10"	Flanged EN 1092 PN16 or ASME B16.5 Class 150

* **Note** 0.6 and 1.5 shell lengths are not available for shell diameters 5" to 10".

Dimensions, weights, volume and PED category (approximate) in mm, kg and litres

Shell Ø	Flange F1	Flange F2	Dimensions A	B	D	L	VEP Weight	VEP Volume Tube	VEP Volume Shell	VEP PED Cat.	VES Weight	VES Volume Tube	VES Volume Shell	VES PED Cat.
1½"	DN32	DN40	94	140	48.3	600	15	0.21	0.84	SEP				
						1000	17	0.35	1.28	SEP				
						1500	19	0.53	1.85	SEP				
						2000	21	0.71	2.42	SEP				
2"	DN40	DN50	90	140	60.3	600	14	0.46	1.18	SEP				
						1000	16	0.76	1.81	SEP	15	0.85	1.86	SEP
						1500	18	1.15	2.59	SEP				
						2000	20	1.53	3.88	SEP	18	1.69	3.42	SEP
						3000					22	2.54	4.98	1
3"	DN65	DN80	110	160	88.9	600	27	1.07	2.63	SEP				
						1000	29	1.79	3.95	SEP	20	2.00	4.30	1
						1500	32	2.67	5.63	1				
						2000	36	3.57	7.24	1	28	3.90	7.70	1
						3000					35	5.90	11.10	1
4"	DN80	DN100	125	180	114.3	600	28	1.88	4.13	1				
						1000	35	3.14	6.25	1	31	3.70	6.40	1
						1500	42	4.71	8.88	1				
						2000	48	6.28	10.50	1	43	7.40	11.40	1
						3000					55	11.10	16.80	2
5"	DN80	DN125	125	200	141.3	1000	43	5.18	8.50	1	40	5.90	9.00	1
						2000	62	10.36	16.07	1	58	11.70	16.30	1
						3000					77	17.60	24.20	2
6"	DN100	DN150	140	220	168.3	1000	60	7.73	11.88	1	48	8.10	13.40	1
						2000	92	15.45	22.06	2	73	16.10	24.50	2
						3000					100	24.10	35.60	2
8"	DN125	DN200	160	250	219.1	1000	92	12.8	20.9	2	100	13.30	23.20	2
						2000	133	25.6	37.7	2	125	26.50	42.80	2
						3000					150	39.70	62.50	2
10"	DN150	DN250	180	280	273.0	1000	146	20.3	33.2	2	190	19.30	35.60	2
						2000	220	40.5	58.9	2	270	38.50	67.50	2
						3000					350	57.70	99.30	3

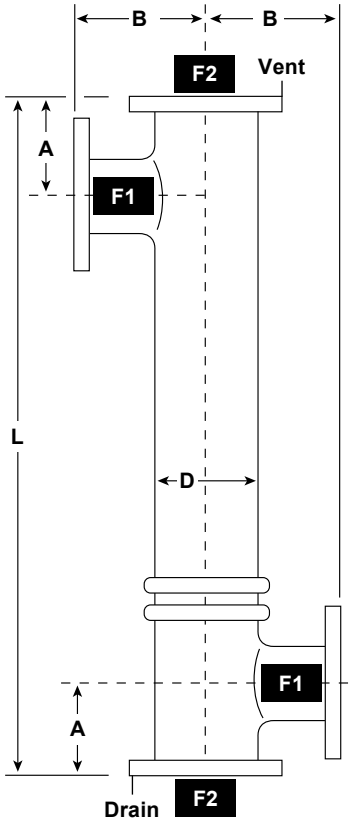

Table notes:

- Dimension tolerance according to UNI 6100 and TEMA:
  B = ±3 mm,
  D = ±3 mm,
  Flange rotation = ±1°,
  Connection alignment = ±1.5 mm.
- Flange sizes according to EN 1092-1 rating PN16, optional equivalent diameter according to ASME B16.5 rating 150 lb.
- PED catagorisation assuming a 'not dangerous fluid', Group 2 according to the classification as per the European Pressure Equipment Directive 97/23/CE.

Product nomenclature

Turlfow type	VEP	= Small diameter tubes	**VES**
	VES	= Large diameter tubes	
Shell diameter	1½", 2", 3", 4", 5", 6", 8", 10"	= VEP range in inches	**2"**
	2", 3", 4", 5", 6", 8", 10"	= VES range in inches	
Tube and tube sheet material	SS	= Stainless steel 304	**SX**
	SX	= Stainless steel 316L	
Tube length	0.6, 1, 1.5, 2	= VEP range in metres	**3**
	1, 2, 3	= VES range in metres	
Connection type	F	= EN flange	**F**
	FA	= ASME flange	
Shell design pressure	V	= 12 bar	**V**
Tube to tube sheet coupling	Blank	= Expanding	**S**
	S	= Welding	
PED category	Blank	= CE marking not supplied	**CI**
	CI	= Category I	
	CII	= Category II	
	CIII	= Category III	

Product selection example

VES	2"	SX	3	F	V	S	CI

How to order

Contact your local Spirax Sarco office with your application details - We will provide the correct product selection, and quotation for the Turflow exchanger that will provide optimum performance for your application.