Cert. No. LRQ 0963008

ISO 9001

TI-P142-01
ST Issue 7

FT47
SG Iron
Ball Float Steam Traps (DN15 to DN50)

Description

The FT47 is an SG iron ball float steam trap with integral automatic air venting facility. It is available with horizontal flanged connections as well as vertical flanged connections, designated FT47V. As an option in the horizontal version up to 21 bar g, a manually adjustable needle valve can be added for use as a steam lock release designated FT47-C. If required, the cover can be drilled and tapped ⅜" BSP or NPT for the purpose of fitting a drain cock. Body and cover castings are produced by a TÜV approved foundry.

Standards - This product fully complies with the requirements of the European Pressure Equipment Directive 97/23/EC and carries the CE mark when so required.

Certification - This product is available with a manufacturers' Typical Test Report. As an available option certification to EN 10204 3.1 can be supplied. **Note:** All certification/inspection requirements must be specified at the time of order placement.

Sizes and pipe connections

DN15, DN20, DN25, DN40 and DN50.

Note: Flow direction, for horizontal orientated traps, when facing the body: **-** DN15 to DN25 is left to right. **-** DN40 and DN50 is right to left.

For vertically orientated traps the flow is downwards only.

Standard flanges are EN 1092 PN40 and PN25 with face-to-face dimensions in accordance with EN 26554 (Series 1).
On request ANSI B 16.5 Class 150 flanges are also available with face-to-face dimensions in accordance with EN 26554 (Series 1).
ANSI flanges are supplied with tapped (UNC) holes for flanged bolts.

Pressure / temperature limits

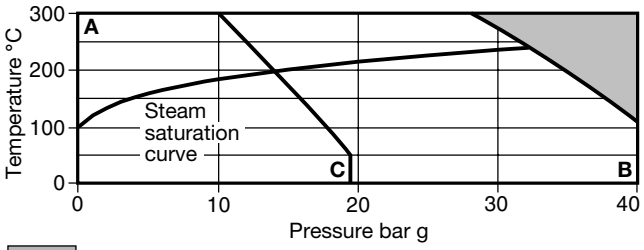

This product **must not** be used in this region.

A - B Flanged EN 1092 PN25/40.
A - C Flanged ANSI 150.

Body design conditions		PN40
PMA	Maximum allowable pressure	40 bar g @ 100°C
TMA	Maximum allowable temperature	300°C @ 28 bar g
Minimum allowable temperature		-10°C
PMO	Maximum operating pressure for saturated steam service	32 bar g @ 239°C

Note: The DN40 and DN50 traps are limited to a PMO equal to ΔPMX

TMO	Maximum operating temperature	300°C @ 28 bar g
Minimum operating temperature		0°C

Note: For lower operating temperatures consult Spirax Sarco

	Size	DN15, 20, 25	DN40, 50
ΔPMX Maximum differential pressure	**FT47-4.5**	4.5 bar	4.5 bar
	FT47-10	10 bar	10 bar
	FT47-14	14 bar	-
	FT47-21	21 bar	21 bar
	FT47-32	32 bar	32 bar

Designed for a maximum cold hydraulic test pressure of 60 bar g
Note: With internals fitted, test pressure must not exceed ΔPMX

Caution: The trap in its complete operational form must not be subjected to a pressure greater than 48 bar otherwise damage to the internal mechanism may result.

Materials See page 2 for the materials list.

Capacities See TI-S02-36 for full details.

FT47
DN15, DN20 and DN25
DN15 shown

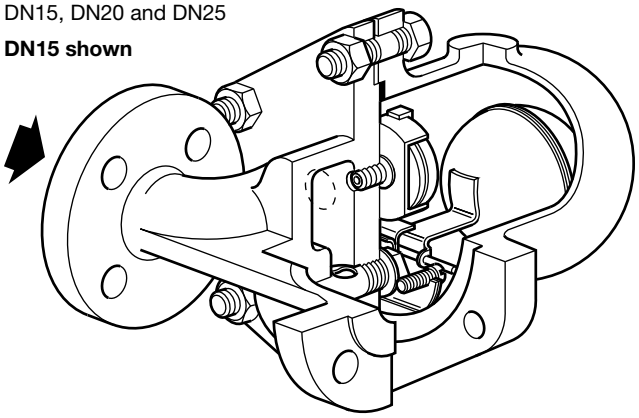

FT47-C

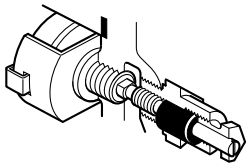

FT47
DN40 and DN50
DN50 shown

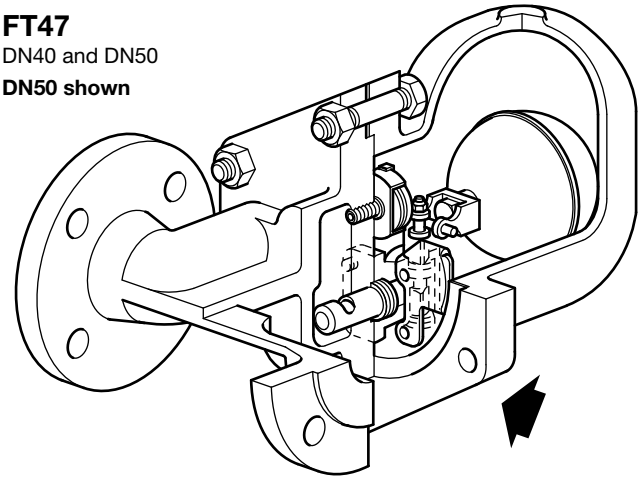

Local regulations may restrict the use of this product to below the conditions quoted.
In the interests of development and improvement of the product, we reserve the right to change the specification without notice.

© Copyright 2007

FT47
DN15, DN20 and DN25
DN15 shown

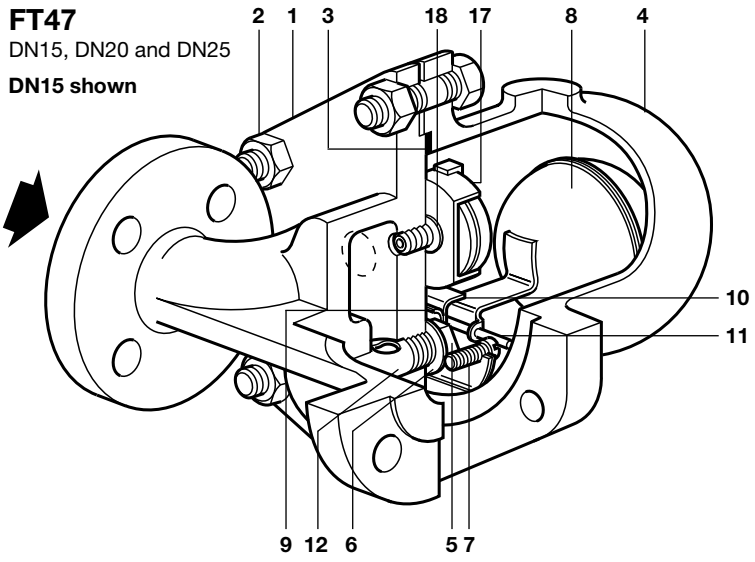

FT47-C

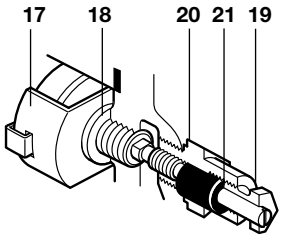

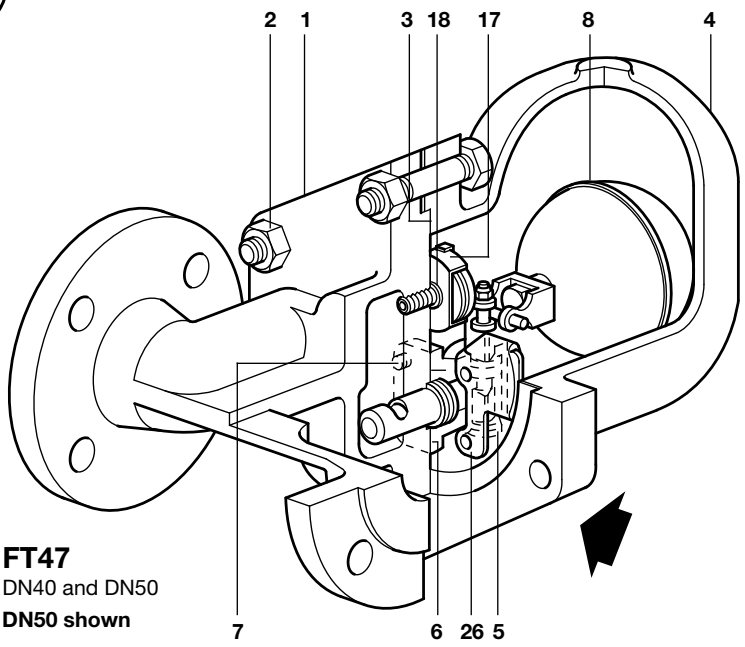

FT47
DN40 and DN50
DN50 shown

Materials

No.	Part			Material	
1	Body			SG iron	DIN 1693 GGG 40.3
2	Cover stud			Steel	DIN 17420 21 Cr Mo V57
	Cover nuts			Steel	DIN 17420 24 Cr Mo 5
3	Cover gasket			Reinforced exfoliated graphite	
4	Cover			SG iron	DIN 1693 GGG 40.3
5	Valve seat		DN15, DN20 and DN25	Stainless steel	BS 970 431 S29
	Main valve assembly with erosion deflector		DN40 and DN50	Stainless steel	BS 3146 Pt2 ANC2 BS 970 416 S37
6	Valve seat gasket		DN15, DN20 and DN25	Stainless steel	BS 1449 304 S11
	Main valve assembly gasket		DN40 and DN50	Reinforced exfoliated graphite	
7	Pivot frame assembly set screws		DN15, DN20 and DN25	Stainless steel	BS 4183 18/8
	Main valve assembly	Bolts	DN40	Stainless steel	BS 970 302 S25
		Studs and nuts	DN50	Stainless steel	BS 970 431 S29
8	Ball float and lever			Stainless steel	BS 1449 304 S16
9	Support frame		DN15, DN20 and DN25	Stainless steel	BS 1449 304 S16
10	Pivot frame		DN15, DN20 and DN25	Stainless steel	BS 1449 304 S16
11	Pivot pin		DN15, DN20 and DN25	Stainless steel	
12	Erosion deflector	DN15, DN20 and DN25 for horizontal installations only		Stainless steel	BS 970 431 S29
17	Air vent assembly			Stainless steel	
18	Air vent seat gasket			Stainless steel	BS 1449 409 S19
19	SLR assembly			Stainless steel	BS 970 303 S31
20	SLR gasket			Steel	BS 1449 CS 4
21	SLR seal			Graphite	
26	Inlet plate	DN40 and DN50 for horizontal installations only		Stainless steel	BS 1449 304 S16

FT47
DN15 and DN20

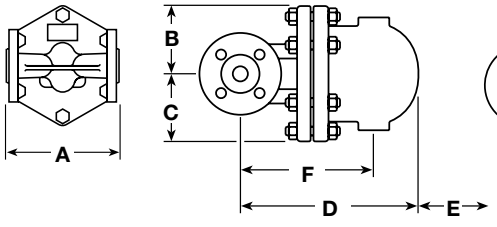

FT47
DN25, DN40 and DN50

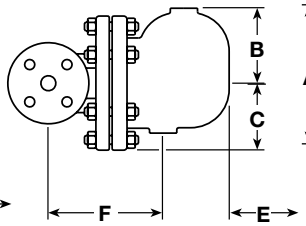

FT47V
DN15 and DN20

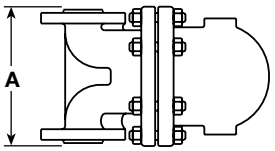

FT47V
DN25, DN40 and DN50

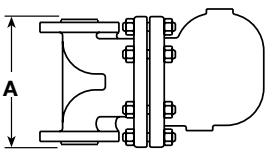

Dimensions/weights (approximate) in mm and kg

Size	A	B	C	D	E	F	Weight
DN15	150	80	80	215	120	155	10.8
DN20	150	80	80	225	120	165	10.8
DN25	160	115	85	276	170	215	15.0
DN40	230	130	115	326	200	200	33.0
DN50	230	141	123	332	200	236	34.0

Face-to-face dimensions in accordance with EN 26554 (Series 1)

Safety information, installation and maintenance

For full details see the Installation and Maintenance Instructions (IM-S02-30) supplied with the product.

Installation note:
The FT47 must be installed with the direction of flow as indicated on the body, and with the float arm in a horizontal plane so that it rises and falls vertically.

Disposal
This product is recyclable. No ecological hazard is anticipated with the disposal of this product, providing due care is taken.

How to order

Example: 1 off Spirax Sarco DN25 FT47-14 ball float steam trap, having an SG iron body and cover with thermostatic air vent. Connections are to be flanged to EN 1092 PN40.

Spare parts

The spare parts available are shown in heavy outline. Parts drawn in broken line are not supplied as spares.

Available spares	
Main valve assembly with float (DN15, DN20 and DN25 horizontal traps)*	**5, 6, 7, 8, 9, 10, 11**
Main valve assembly with integral erosion deflector (DN40 and 50) ** (specify horizontal or vertical trap)	**5, 6, 7, 12, 26**
Main valve assembly with float (DN15, DN20 and DN25 vertical traps only)	**5, 6, 7, 8, 9, 10, 11**
Ball float (DN40 and 50)	**8**
Air vent assembly	**17, 18**
Steam lock release and air vent assembly (FT47-C)	**17, 18, 19, 20, 21**
Complete set of gaskets (packet of 3 sets)	**3, 6, 18, 20, 21**

* On horizontal traps the erosion deflector on the DN15, DN20 and DN25 is pressed into the body during manufacture and not available as a spare.
** There is no erosion deflector on vertical traps in sizes DN40 and DN50.

How to order spares
Always order spares by using the description given in the column headed 'Available spares' and state the size and type of trap, including pressure range and orientation i.e.: horizontal or vertical connections.
Example: 1 - Air vent assembly for a Spirax Sarco DN20 FT47-21 ball float steam trap, with horizontal connections.

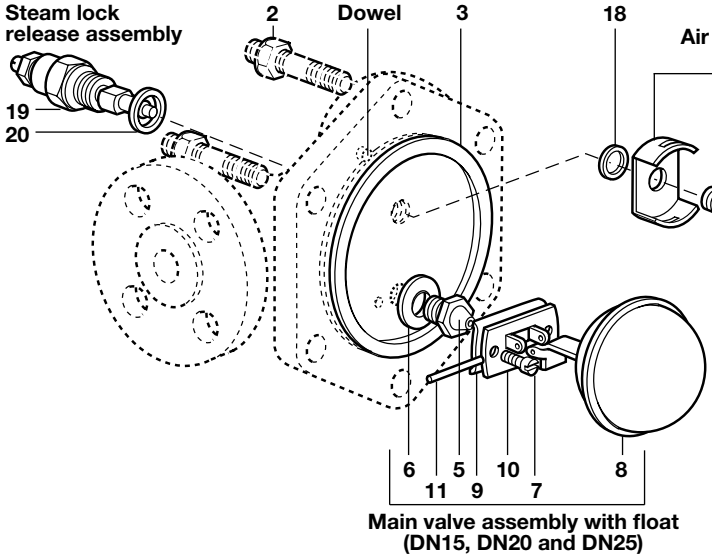

Main valve assembly with float (DN15, DN20 and DN25)

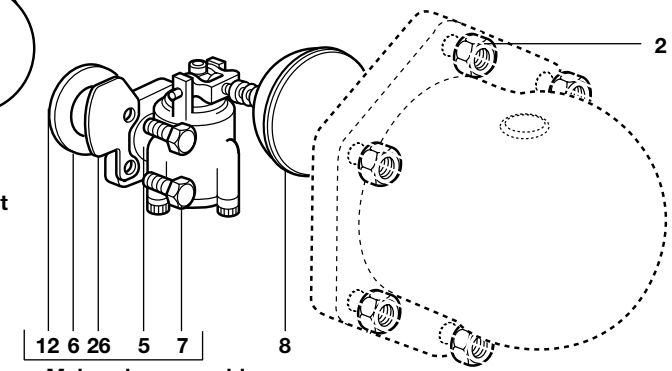

Main valve assembly (DN40 and DN50) (horizontal assembly shown)

Recommended tightening torques

Item	Size	or mm		N m
2	DN15, 20 and 25	17 A/F	M10 x 60	19 - 22
	DN40	19 A/F	M16 x 85	60 - 66
	DN50	24 A/F	M16 x 85	80 - 88
5	DN15, 20 and 25	17 A/F		50 - 55
7	DN15, 20 and 25		M5 x 20	2.5 - 2.8
	DN40	10 A/F	M6 x 20	10 - 12
	DN50	13 A/F	M8 x 20	20 - 24
17		17 A/F		50 - 55
19		22 A/F		50 - 55