spirax sarco

TD45
Thermodynamic Steam Trap
Installation and Maintenance Instructions

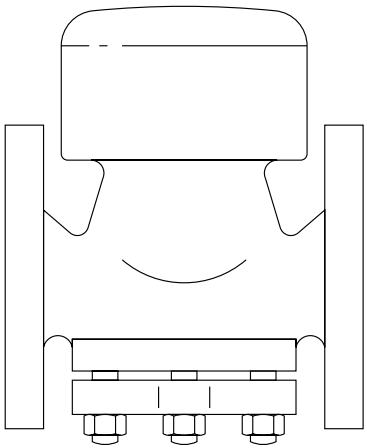

1. General safety information

Safe operation of this unit can only be guaranteed if it is properly installed, commissioned and maintained by a qualified person (see Section 11 of the attached Supplementary Safety Information) in compliance with the operating instructions. General installation and safety instructions for pipeline and plant construction, as well as the proper use of tools and safety equipment must also be complied with.

Warning

The cover gasket contains a thin stainless steel support ring which may cause physical injury if not handled and disposed of carefully.

Isolation

Consider whether closing isolating valves will put any other part of the system or personnel at risk. Dangers might include; isolation of vents and protective devices or alarms. Ensure isolation valves are turned off in a gradual way to avoid system shocks.

Pressure

Before attempting any maintenance consider what is or may have been in the pipeline. Ensure that any pressure is isolated and safely vented to atmospheric pressure before attempting to maintain the product, this is easily achieved by fitting Spirax Sarco depressurisation valves type DV (see separate literature for details). Do not assume that the system is depressurised even when a pressure gauge indicates zero.

Temperature

Allow time for temperature to normalise after isolation to avoid the danger of burns and consider whether protective clothing (including safety glasses) is required.

Disposal

The product is recyclable. No ecological hazard is anticipated with the disposal of this product providing due care is taken.

2. General product information

2.1 General description

The TD45 is an integrally flanged maintainable medium pressure thermodynamic steam trap complete with integral strainer.
An insulating cover is fitted as standard to prevent the trap being unduly affected by excessive heat loss when subjected to low outside temperatures, wind, rain etc...
Note: For further information see the following Technical Information Sheet, TI-P068-05, which gives full details of: Materials, sizes and pipe connections, dimensions, weights, operating ranges and capacities.

2.2 Sizes and pipe connections

DN15 and DN20 flanged,
DIN 2546 PN64 and DIN 2547 PN100,
ANSI 300 and ANSI 600

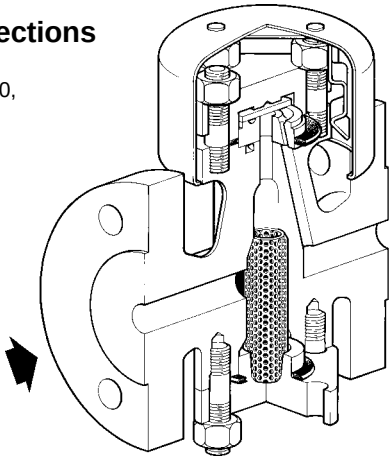

Fig. 1 Thermodynamic steam trap

2.3 Limiting conditions (ISO 6552)

Body design conditions	PN63	
PMA - Maximum allowable pressure	63 bar g	(914 psi g)
TMA - Maximum allowable temperature	450°C	(842°F)
PMO - Maximum operating pressure	45 bar g	(652 psi g)
TMO - Maximum operating temperature	450°C	(842°F)
Designed for a maximum cold hydraulic test pressure of:	95 bar g	(1 378 psi g)

Note: Minimum pressure for satisfactory operation is 1.4 bar g (20.3 psi g).
PMOB - Maximum operating back pressure 80% of upstream pressure.

2.4 Operating range

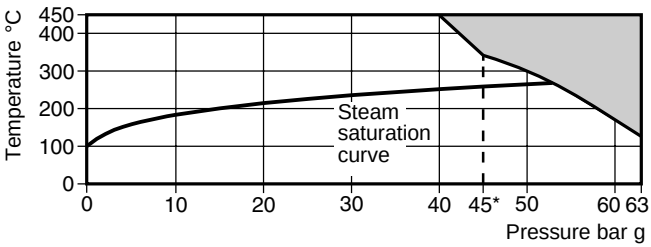

The product must not be used in this region.

* PMO Maximum operating pressure recommended for saturated steam 45 bar g.

3. Installation

Note: Before actioning any installation observe the 'Safety information' in Section 1.

Referring to the Installation and Maintenance Instructions, name-plate and Technical Information Sheet, check that the product is suitable for the intended installation:

3.1 Check materials, pressure and temperature and their maximum values. If the maximum operating limit of the product is lower than that of the system in which it is being fitted, ensure that a safety device is included in the system to prevent overpressurisation.

3.2 Determine the correct installation situation and the direction of fluid flow.
A typical installation is shown in Fig. 2, Section 4.

3.3 Remove protective covers from all connections.

3.4 The preferred installation is in a horizontal pipe with the insulating cover uppermost. The trap will operate in any position, but the service life may be affected. A small drop leg should precede the trap.

3.5 Suitable isolation valves must be installed to allow for safe maintenance and trap replacement. Consideration should be given to a suitable method for testing the correct operation of the trap. This may be a sight glass or a Spiratec system. Sight glasses must be positioned a minimum of 1 m (3 ft) downstream of any blast action traps. Where the trap discharges into a closed return system a non-return valve should be fitted downstream to prevent flow.

3.6 Always open isolation valves slowly until normal operating conditions are achieved - this will avoid system shocks. Check for leaks and correct operation.

3.7 Always ensure the correct tools, safety procedures and protective equipment are used at all times.

3.8 The disc and seating surfaces of these traps have been produced to a high degree of flatness to achieve good shut-off under high pressure conditions. An integral strainer helps prevent dirt and scale from entering the trap. If particles become entrapped between the disc and seat, the high flow velocities can cause rapid wear and erosion. A separate strainer and / or dirt pocket will provide additional protection.

3.9 Access for removal of the integral strainer screen should be provided.

3.10 The insulating cover may be removed to facilitate installation, but it must be replaced before the trap is put into service.

Note: If the trap is to discharge to atmosphere ensure it is to a safe place, the discharging fluid may be at a temperature of 100°C (212°F).

4.1 Commissioning with particular reference to venting air

Initial start-up can take several hours (or days) to bring the system to normal operating pressure and temperature. Even if the trap has replaced another trap while the main system has remained running, it may still be necessary to vent air from the drop leg. If the trap is some distance from stop valve '**A**' (Fig. 2), it could be possible to air lock the pipework between valve '**A**' and the trap (i.e. the trap closes to air and does not readily allow steam to enter the pipework). To overcome this on start-up the following procedure should be adopted. With the stop valve '**B**' closed, drain valve '**C**' open, slowly and partially open stop valve '**A**'. This will discharge the air, condensate and any pipe debris. Valve '**C**' should be fully closed, and valves '**A**' and '**B**' slowly opened to the fully open position.

When the trap is more than 2 m (6 ft) away from the vertical drain leg, a suitable drop leg at the inlet to the trap can improve its service life by ensuring that the trap does not see a mixture of steam and condensate.

Important note

After the trap has been in service at normal operating pressure and temperature for 24 hours, it is essential that the cover nuts be retightened (see Table 1, page 6). This will ensure the correct compression of the gasket under service conditions.

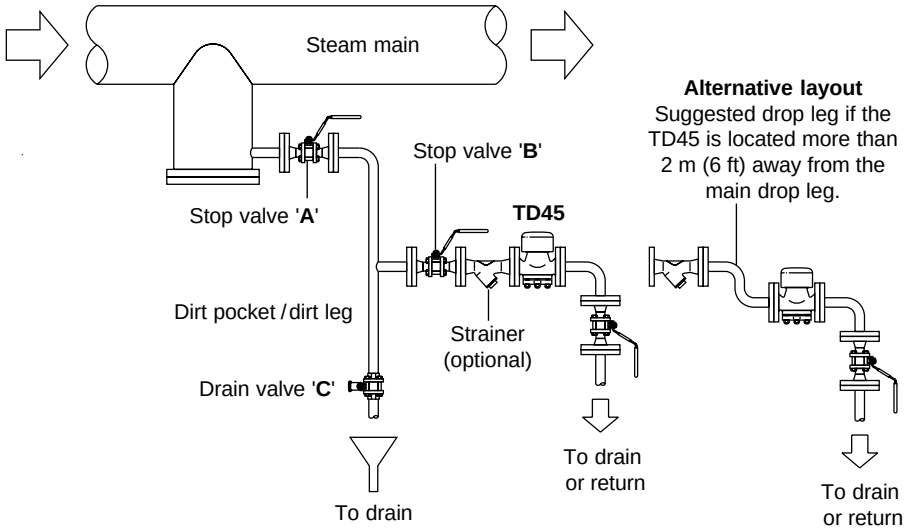

Fig. 2 Typical installation

5. Operation

The thermodynamic stam trap will discharge condensate with a blast type action at few degrees below steam saturation temperature, due care must be given to the site of the discharge.

6. Maintenance

Note: Before actioning any maintenance program observe the 'Safety information' in Section 1.

Warning

The cover gasket contains a thin stainless steel support ring which may cause physical injury if not handled and disposed of carefully.

6.1 How to fit the disc:

- Spring off the insulating cover, unscrew the four nuts and remove the top cover.
- Lift off the disc.
- Fit a new disc making sure that the body seating surface is not unduly worn. If the body seating surface is only slightly worn it can be refaced by lapping individually on a flat surface such as a surface plate.
  If the wear is too great to be rectified by simple lapping, the seating faces on the body must be ground flat and then lapped. The total amount of metal removed in this way should not exceed 0.25 mm.
- Reassemble the cover using a new gasket, making sure that the gasket faces are perfectly clean.
- Spring on the insulating cover.
- After 24 hours in service, and when reassembling, the nuts should be tightened in a diagonally opposite sequence to a torque of 45 N m (33 lbf ft).

6.2 How to clean or replace the strainer:

- Access to the strainer screen can be obtained by undoing the nuts and removing the bottom cover.
- Remove the strainer screen.
- Fit the new or cleaned strainer screen into the recess in the cover.
- A new gasket should be fitted and the cover refitted.
- After 24 hours in service, and when reassembling, the nuts should be tightened in a diagonally opposite sequence to a torque of 45 N m (33 lbf ft).

6.3 To replace the cover studs:

- After removing the old cover studs, fit new cover studs using a torque of 20 - 25 N m (15 - 18 lbf ft) until the studs bottom out. The use of a thread lubricant is recommended.

Table 1 Recommended tightening torques

Item no.	 or  mm	N m	(lbf ft)
7 (studs)	M10 x 1.5	20 - 25	(15 - 18)
7 (nuts)	17	45 - 50	(33 - 37)

7. Spare parts

The spare parts available are shown in heavy outline. Parts drawn in broken line are not supplied as spares.

Available spares

Disc (packet of 3)	**6**
Strainer screen	**8**
Cover gaskets (2 off)	**5**
Insulating cover	**9**

How to order spares

Always order spares by using the description given in the column headed 'Available spares' and state the size and type of trap.

Example: 1 - Strainer screen for a Spirax Sarco DN15 TD45 thermodynamic steam trap.

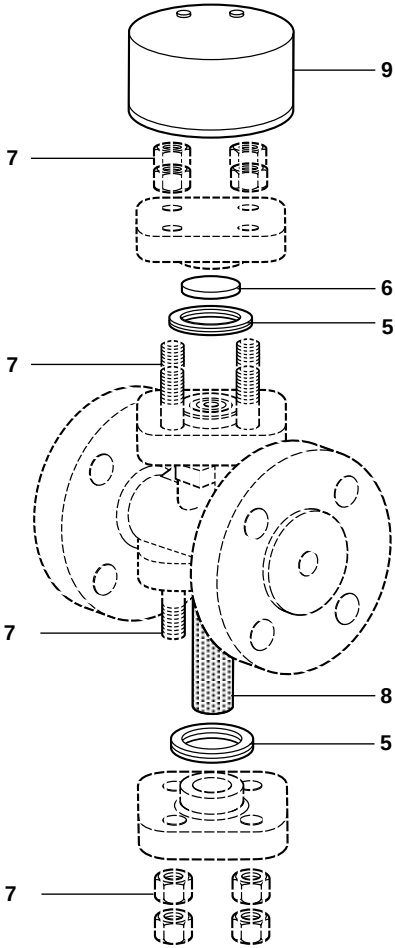

Fig. 3