BPS32 and BPS32Y Stainless Steel Balanced Pressure Thermostatic Steam Traps

Installation and Maintenance Instructions

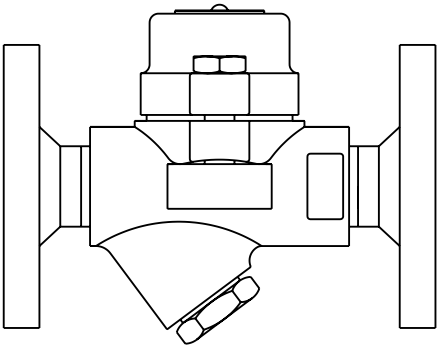

1. General safety information

Safe operation of the unit can only be guaranteed if it is properly installed, commissioned and maintained by a qualified person (see Section 11 of the attached Supplementary Safety Information) in compliance with the operating instructions. General installation and safety instructions for pipeline and plant construction, as well as the proper use of tools and safety equipment must also be complied with.

Warning

The cover gasket contains a thin stainless steel support ring which may cause physical injury if not handled and disposed of carefully.

Isolation

Consider whether closing isolating valves will put any other part of the system or personnel at risk. Dangers might include; isolation of vents and protective devices or alarms. Ensure isolation valves are turned off in a gradual way to avoid system shocks.

Pressure

Before attempting any maintenance consider what is or may have been in the pipeline. Ensure that any pressure is isolated and safely vented to atmospheric pressure before attempting to maintain the product, this is easily achieved by fitting Spirax Sarco depressurisation valves type DV (see separate literature for details). Do not assume that the system is depressurised even when a pressure gauge indicates zero.

Temperature

Allow time for temperature to normalise after isolation to avoid the danger of burns and consider whether protective clothing (including safety glasses) is required.

Disposal

The product is recyclable. No ecological hazard is anticipated with the disposal of this product providing due care is taken.

2. General product information

2.1 Description

The BPS32 and BPS32Y are stainless steel maintainable balanced pressure thermostatic steam traps with straight connections.
The BPS32 has an integral flat strainer screen and the BPS32Y an integral cylindrical, Y-type strainer. All pressure bearing components are produced by TÜV approved suppliers in accordance with AD-Merkblatt WO/TRD100.
Both traps are unaffected by waterhammer and are available as follows:-

Standard units	**BPS32 and BPS32Y**	having 'STD' fill capsule
Also available	**BPS32CV and BPS32YCV**	having 'STD' fill capsule and check valve.

Note: When placing an order always state capsule fill.

Capsule fill and operation:

Standard capsule - Is marked with '**STD**' for operation at approximately 12°C (21.6°F) below steam saturation temperature.

Optionally - The capsule can be supplied for sub-cooled '**SUB**' operation at approximately 24°C (43.2°F) below steam saturation temperature or near-to-steam '**NTS**' operation at approximately 6°C (10.8°F) below steam temperature.

Standards

This product fully complies with the requirements of the European Pressure Equipment Directive 97/23/EC.

Certification

This product is available with certification to EN 10204 3.1.B.
Note: All certification/inspection requirements must be stated at the time of order placement.

Note: For additional information see Technical Information Sheet, TI-P005-03.

2.2 Sizes and pipe connections

½", ¾", and 1" screwed BSP or NPT.
½", ¾", and 1" socket weld ends to BS 3799.
½", ¾", and 1" butt weld ends to EN 12 627.
DN15, DN20 and DN25 standard flange to EN 1092 PN40,
ANSI B 16.5 Class 150 and 300, JIS/KS 10K and JIS/KS 20K.

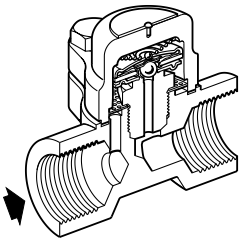

Fig. 1 BPS32

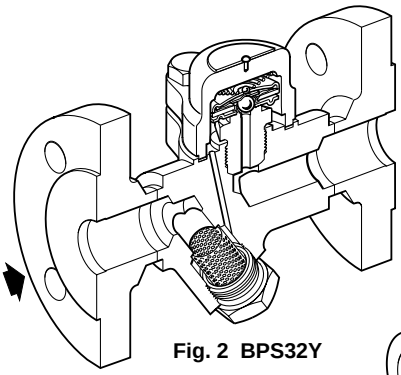

Fig. 2 BPS32Y

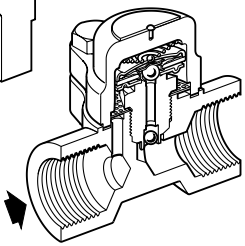

Fig. 3 BPS32CV and BPS32YCV

2.3 Pressure / temperature (ISO 6552)

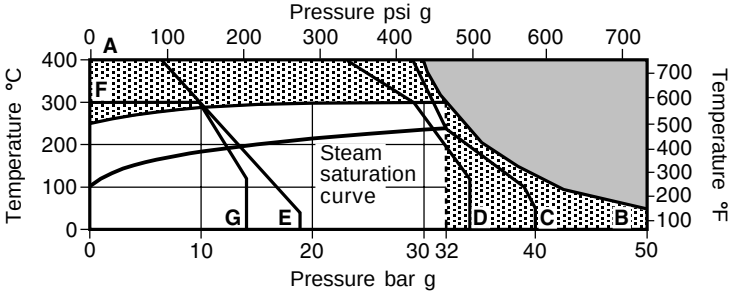

The product **must not** be used in this region.

The product should not be used in this region or beyond its operating range as damage to the internals may occur.

A - B Screwed, socket weld, butt weld and flanged ANSI 300.

A - C Flanged EN 1092 PN40.

A - D Flanged JIS / KS 20K.

A - E Flanged ANSI 150.

F - G Flanged JIS / KS 10K.

Body design conditions			PN40
PMA	Maximum allowable pressure	50 bar g @ 50°C	(725 psi g @ 122°F)
TMA	Maximum allowable temperature	400°C @ 35 bar g	(752°F @ 507 psi g)
Minimum allowable temperature		-200°C	(-328°F)
PMO	Maximum operating pressure for saturated steam service	32 bar g	(464 psi g)
TMO	Maximum operating temperature	300°C @ 32 bar g	(572°F @ 464 psi g)
Minimum operating temperature		0°C	(32°F)
Note: For lower operating temperatures consult Spirax Sarco.			
Designed for a maximum cold hydraulic test pressure of:		75 bar g	(1 088 psi g)

3. Installation

Note: Before actioning any installation observe the 'Safety information' in Section 1.

Referring to the Installation and Maintenance Instructions, name-plate and Technical Information Sheet, check that the product is suitable for the intended installation:

3.1 Check materials, pressure and temperature and their maximum values. If the maximum operating limit of the product is lower than that of the system in which it is being fitted, ensure that a safety device is included in the system to prevent overpressurisation.

3.2 Determine the correct installation situation and the direction of fluid flow.

3.3 Remove protective covers from all connections and the protective film from all name-plates, where appropriate, before installation on steam or other high temperature applications.

3.4 The trap is designed for installation in any position, horizontal or vertical, preferably with a drop leg immediately preceding the trap - typically 150 mm (6") see Figure 4.
Caution: If no drop leg is allowed then it may be possible (under low load conditions) for steam to flow over the condensate in the bottom of the pipe and reach the trap.

3.5 Always fit a non-return (check) valve downstream of any steam traps which discharge into condensate return lines where backpressure is experienced. This is most commonly caused by a rising condensate line. The check valve will prevent the steam space flooding when the inlet pressure is reduced or the steam is shut off. Use a suitable valve such as the Spirax Sarco DCV41, see Figure 4.

3.6 When the trap is discharging to atmosphere, it is strongly recommended to install a diffuser on the outlet side of the trap. This reduces any problem of noise and erosion by cushioning high velocity discharge. See TI-P155-02 for further information.

3.7 Isolation valves must be installed to allow for safe maintenance and trap replacement.

3.8 Open isolation valves slowly until normal operating conditions are achieved.

3.9 Check for leaks and correct operation.

3.10 Ensure adequate space is left to remove the cover from the body for maintenance. Minimum withdrawal distance for the cover is 37 mm (1½") and minimum withdrawal distance for the strainer screen (BPS32Y) is 28 mm (1⅛").

3.11 **Welding into the pipeline** - There is no need to remove the operating capsule from the product providing the welding is performed using the electric arc method. For specific weld procedures consult the relevant National and International welding standards.

Note: If the trap is to discharge to atmosphere ensure it is to a safe place as the discharging fluid may be at a temperature of 100°C (212°F).

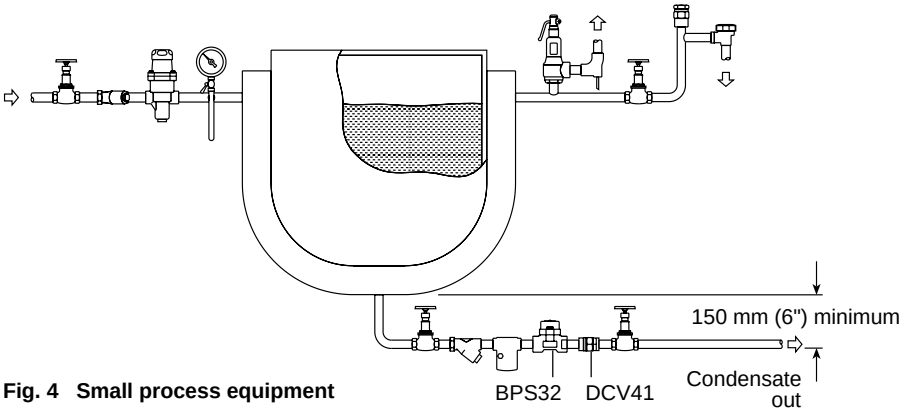

Fig. 4 Small process equipment

4. Commissioning

After installation or maintenance ensure that the system is fully functional. Carry out tests on any alarms or protective devices.

5. Operation

The operating element is a capsule containing a small quantity of a special liquid with a boiling point below that of water. In the cold conditions that exist at start-up, the capsule is relaxed. The valve is off its seat and is wide open, allowing unrestricted removal of air. This is a feature of all balanced pressure traps and explains why they are well suited to air venting.
As condensate passes through the balanced pressure steam trap, heat is transferred to the liquid in the capsule. The fill liquid boils before steam reaches the trap. The vapour pressure within the capsule causes it to expand and the trap shuts. Heat loss from the trap then cools the water surrounding the capsule, the fill condenses and the capsule contracts, opening the valve and releasing condensate until steam temperature approaches again at which the cycle is repeated.

6. Maintenance

Note: Before actioning any maintenance programme observe the 'Safety information' in Section 1.

Warning

The cover gasket contains a thin stainless steel support ring which may cause physical injury if not handled and disposed of carefully.

6.1 General information

Before undertaking any maintenance on the trap it must be isolated from both the supply line and return line and any pressure allowed to safely normalise to atmosphere. The trap should then be allowed to cool. When reassembling, ensure that all joint faces are clean.
Maintenance can be completed with the trap in the pipeline, once the safety procedures have been observed. It is recommended that new gaskets and spares are used whenever maintenance is undertaken. Ensure that the correct tools and necessary protective equipment are used at all times. When maintenance is complete open isolation valves slowly and check for leaks.

6.2 How to fit a new capsule and seat:

- Remove the cover (**1**) and spring (**17**) from the body (**8**) by unscrewing the two cover bolts (**9**).
- Remove the capsule (**2**) and spacer plate (**18**).
- Unscrew the valve seat (**3**) from the body (**8**).
- Clean or replace the strainer screen (**5**, BPS32 only).
- Replace the valve seat (**3**) and tighten to the recommended torque (see Table 1, page 8).
- It is recommended to fit a new cover gasket (**7**) reassemble the spacer plate (**18**) ensuring that it is located centrally on the valve seat (**3**).
- Reassemble the capsule (**2**), spring (**17**) and cover (**1**).

Note: Care must be taken to ensure the cover bolts (**9**) are progressively tightened to the recommended torque (see Table 1, page 8).

6.3 How to clean or replace the strainer screen (BPS32Y):

- Undo the strainer cap (**10**) and remove the strainer screen (**5**).
- Clean or replace as required and reassemble the strainer cap (**10**) into the body (**8**), ensuring that the strainer screen (**5**) is located centrally and a new strainer cap gasket (**11**) is recommended.
- Using a little anti-seize compound on the threads tighten to the recommended torque (see Table 1, page 8).

6.4 How to clean or replace the strainer screen (BPS32):

- Remove the cover (**1**) and spring (**17**) from the body (**8**) by unscrewing the two cover bolts (**9**).
- Remove the capsule (**2**) and spacer plate (**18**).
- Unscrew the valve seat (**3**) from the body (**8**).
- Clean or replace the screen (**5**) as required.
- Replace the valve seat (**3**) and tighten to the recommended torque (see Table 1, page 8).
- It is recommended to fit a new cover gasket (**7**), reassemble the spacer plate (**18**) ensuring that it is located centrally on the valve seat (**3**).
- Reassemble the capsule (**2**), spring (**17**) and cover (**1**).

Note: Care must be taken to ensure the cover bolts (**9**) are progressively tightened to the recommended torque (see Table 1, page 8).

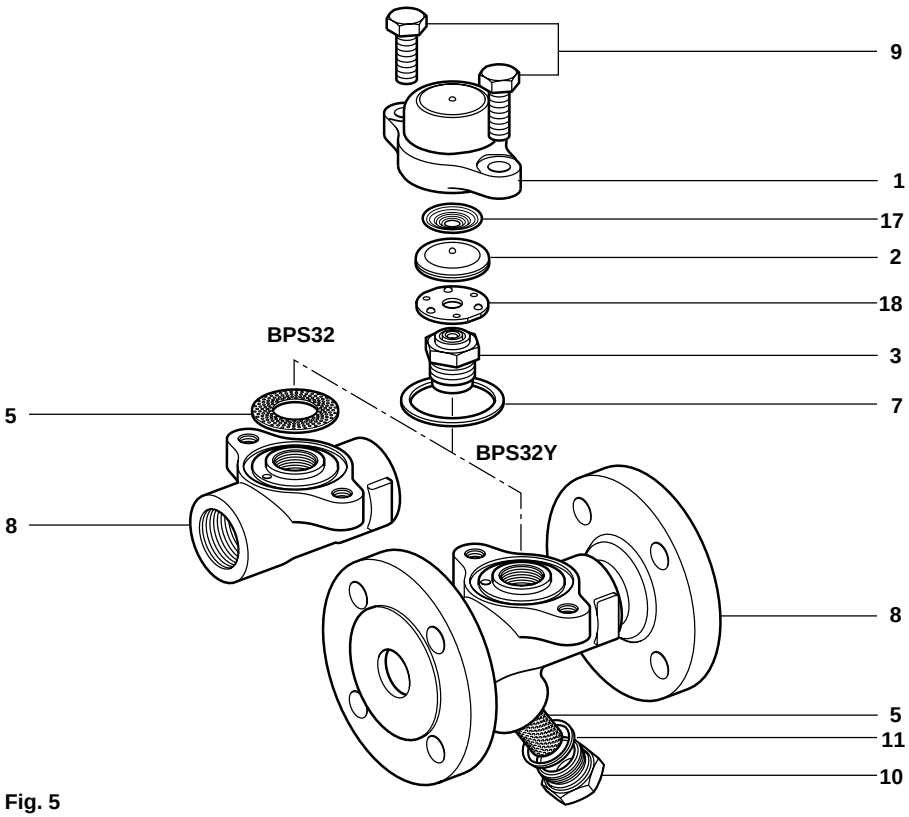

Fig. 5

7. Spare parts

The spare parts available are shown in solid outline. Parts drawn in broken line are not supplied as spares.

Available spares

Capsule and seat assembly set			**2**, **3**, **17**, **18**
Strainer screen	BPS32	(3 off)	**5**
Strainer screen and gasket	BPS32Y	(1 off each)	**5, 11**
Set of cover gaskets		(packet of 3)	**7**
Strainer cap gasket		(packet of 3)	**11**

How to order spares

Always order spares by using the description given in the column headed 'Available spares' and state the size, model number and capsule reference.

Example: 1 - Capsule and seat assembly set for a Spirax Sarco DN25 BPS32Y having an 'STD' fill capsule for operation at 12°C (21.6°F) below steam saturation temperature.

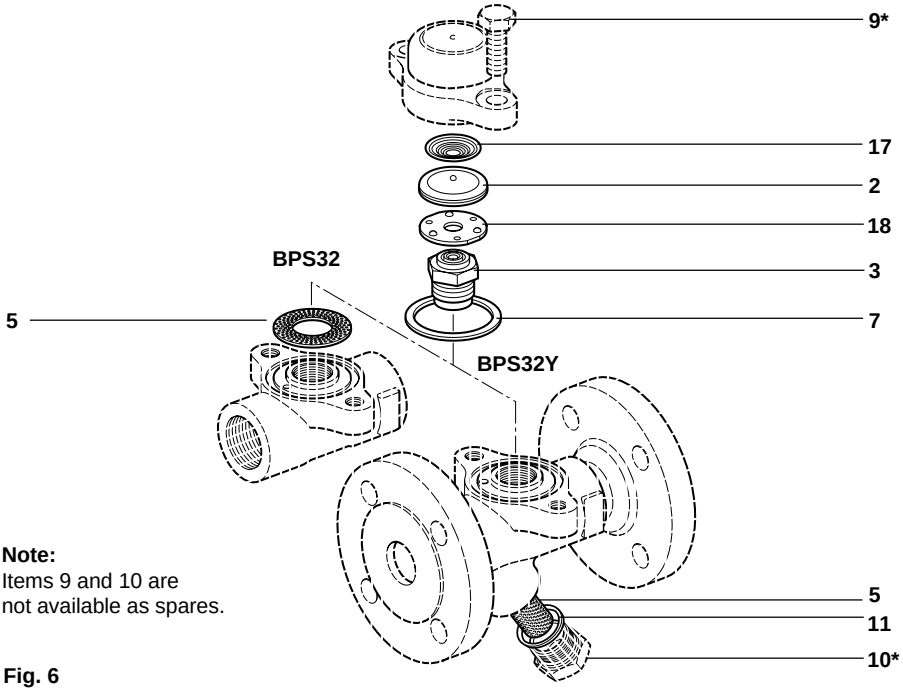

*Note:
Items 9 and 10 are not available as spares.

Fig. 6

Table 1 Recommended tightening torques

Item	Part	or mm		N m	(lbf ft)
3	Valve seat	24 A/F		115 - 125	(82 - 89)
9	Cover bolts	16 A/F	M10 x 30	23 - 27	(16 - 19)
10	Strainer cap	27 A/F		120 - 135	(86 - 96)