BPM21SL Stainless Steel Balanced Pressure Thermostatic Steam Trap

Installation and Maintenance Instructions

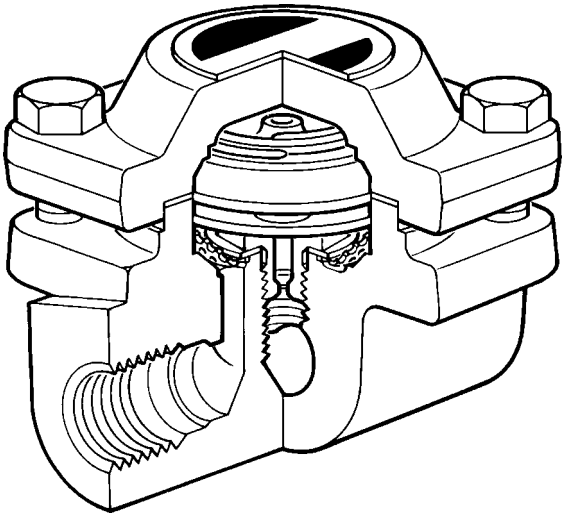

1. Safety information

Warning

The cover gasket on the BPM21SL contains a thin stainless steel support ring, which may cause physical injury if it is not handled and disposed of carefully.

Isolation

Consider whether closing isolating valves will put any other part of the system or personnel at risk. Dangers might include; isolation of vents, protective devices or alarms. Ensure isolation valves are turned off in a gradual way to avoid system shocks.

Pressure

Before attempting any maintenance of the steam trap, consider what is or may have been in the pipeline. Ensure that any pressure is isolated and safely vented to atmospheric pressure before attempting to maintain the steam trap. This is easily achieved by fitting Spirax Sarco depressurisation valves type DV (see separate literature for details). Do not assume that the system is depressurised even when a pressure gauge indicates zero.

Temperature

Allow time for temperature to normalise after isolation to avoid the danger of burns and consider whether protective clothing (including safety glasses) is required.

Disposal

The product is recyclable. No ecological hazard is anticipated with disposal of this product providing due care is taken.

© Copyright 2001

2. Product information

2.1 General description

The BPM21SL is a compact, stainless steel bodied, balanced pressure steam trap suitable for light load applications.

Capsule fill and operation

Standard capsule is marked with the letter '**E**' for operation at approximately 13°C (23°F) below steam saturation temperature.

Optionally, the capsule can be supplied for near-to-steam '**G**' operation at approximately 6°C (11°F) below steam saturation temperature or for sub-cooled '**F**' operation at approximately 24°C (43°F) below steam saturation temperature.

Note: When placing an order for either a unit or spares always state the capsule fill.

2.2 Sizes and pipe connections

3/8" and **½**" screwed BSP (BS 21 parallel) or API.
Socket weld ends (**½**" only).

2.3 Limiting conditions **(ISO 6552)**

Maximum body design condition	PN25	
PMA - Maximum allowable pressure	25 bar g	(362 psi g)
TMA - Maximum allowable temperature	400°C	(752°F)
PMO - Maximum operating pressure	21 bar g	(305 psi g)
TMO - Maximum operating temperature	242°C	(467°F)
Designed for a maximum cold hydraulic test pressure of:	38 bar g	(551 psi g)

2.4 Operating range

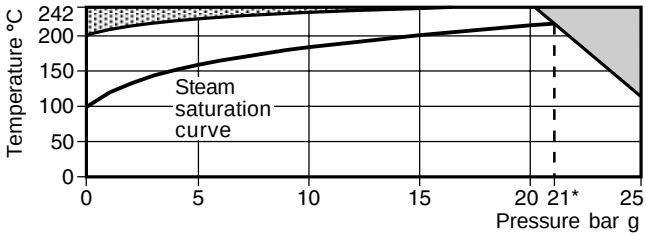

The product must not be used in this region.

The product should not be used in this region or beyond its operating range as damage to the internals may occur.

***** PMO Maximum operating pressure recommended for saturated steam.

3. Installation

Note: Before actioning any installation observe the 'Safety information' in Section 1.
The trap is designed for installation with the capsule in a horizontal plane and the cover at the top, preferably with a drop leg immediately preceding the trap. When welding the trap into the pipeline, there is no need to remove the capsule, providing the welding is done by the electric arc method. Suitable isolation valves must be installed to allow for safe maintenance and trap replacement. Remove all protective caps prior to installation. Open isolation valves slowly until normal operating conditions are achieved. Check for leaks and correct operation.

4. Maintenance

Note: Before actioning any maintenance program observe the 'Safety information' in Section 1.

Maintenance can be completed with the trap in the pipeline. It is recommended that new gaskets and spares are used whenever maintenance is undertaken. Ensure that the correct tools and necessary protective equipment are used at all times. When maintenance is complete open isolation valves slowly and check for leaks.

How to fit a new capsule and seat assembly

- Remove cover by unscrewing the four cover bolts (**7**). Internals can then be removed and strainer screen cleaned or replaced.
- It is important to replace (when necessary) the complete and correct capsule and seat assembly (**2**, **3** and **8**) and to make sure that all joint faces are clean.
- Always fit a new seat gasket (**5**) using a little anti-seize compound on the threads and do not forget to replace spacer plate and make sure that the cover gasket is properly located in the recess in the cover before fitting.
- Replace cover and tighten bolts (**7**) to the recommended torque (see Table below).

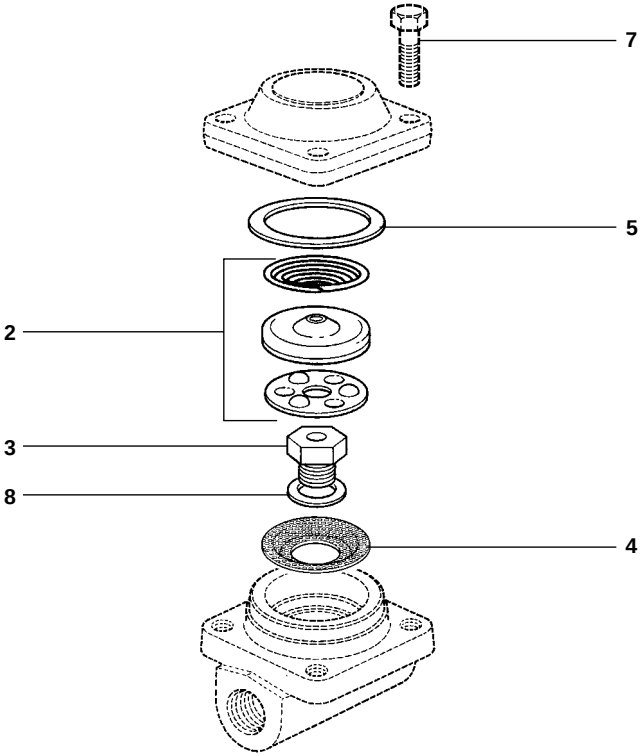

Recommended tightening torques

Item	or mm	N m	(lbf ft)
3	17 A/F	50 - 55	(37 - 40)
7	M8 x 25	14 - 18	(10 - 13)

5. Spare parts

The spare parts available are shown in heavy outline. Parts drawn in broken line are not supplied as spares.

Available spares

Capsule and seat assembly	**2**, **3**, **8**
Gasket set	**5**, **8**
Strainer screen (packet of 3)	**4**

How to order spares

Always order spares by using the description given in the column headed 'Available spares' and state the size and type of trap.
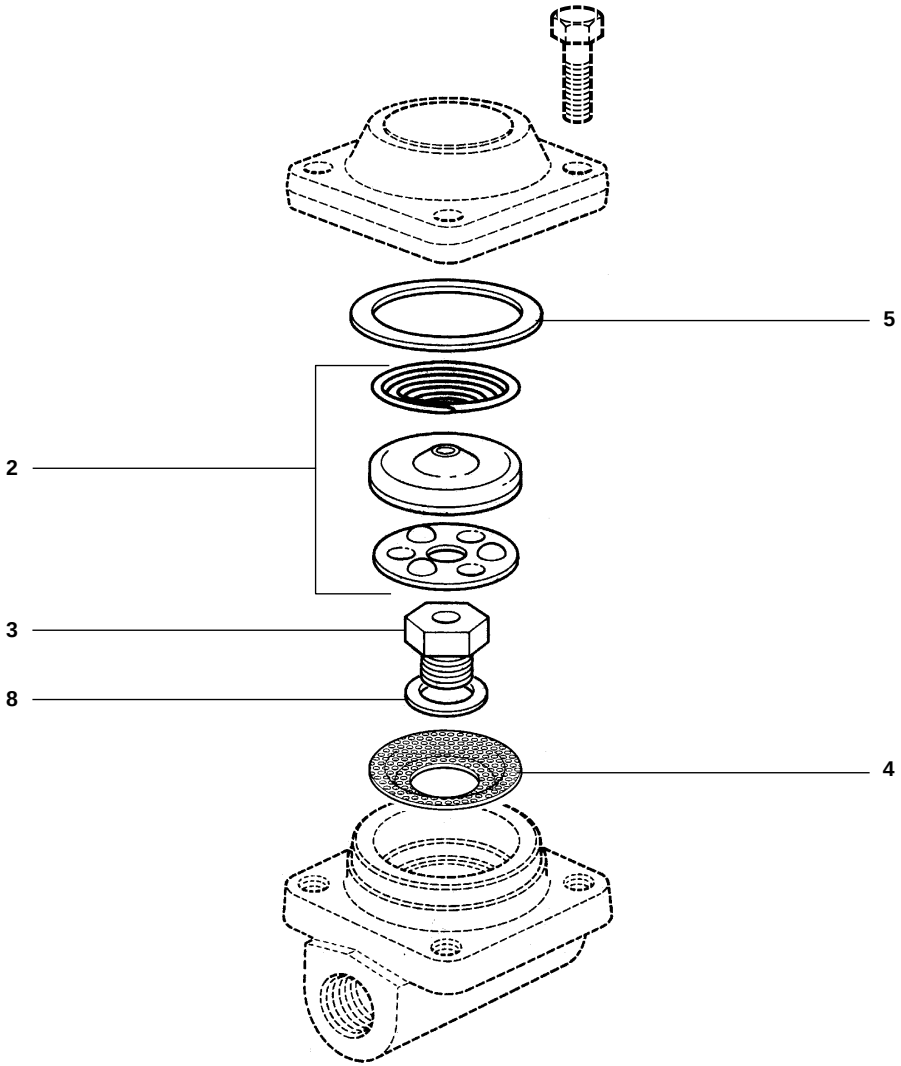
Example: 1 off Capsule and seat assembly for ½" Spirax Sarco BPM21SL steam trap having 'E' fill operation at 13°C (23°F) below steam saturation temperature.