spirax sarco

Type PF5 and PF6 Piston Actuated Valves

Installation and Maintenance Instructions

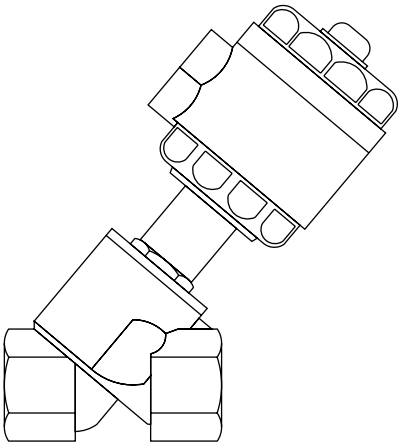

1. Safety information
2. General product information
3. Installation
4. Commissioning
5. Maintenance
6. Spare parts

© Copyright 2012
Printed in the UK

1. Safety information

Safe operation of these products can only be guaranteed if they are properly installed, commissioned, used and maintained by qualified personnel (see Section 1.11) in compliance with the operating instructions. General installation and safety instructions for pipeline and plant construction, as well as the proper use of tools and safety equipment must also be complied with.

1.1 Intended use

Referring to the Installation and Maintenance Instructions, name-plate and Technical Information Sheet, check that the product is suitable for the intended use/application. The products listed below comply with the requirements of the European Pressure Equipment Directive 97/23/EC and carry the CE mark when so required. The products fall within the following Pressure Equipment Directive categories:

Product			Group 1 Gases	Group 2 Gases	Group 1 Liquids	Group 2 Liquids
PF51G	DN15 - DN25	(PN25)	SEP	SEP	SEP	SEP
	DN32 - DN40	(PN25)	-	SEP	SEP	SEP
	DN50	(PN16)	-	SEP	SEP	SEP
PF6_G	DN15 - DN25	(PN40)	SEP	SEP	SEP	SEP
	DN32 - DN40	(PN25)	1	SEP	SEP	SEP
	DN50	(PN16)	1	SEP	SEP	SEP

i) The products have been specifically designed for use on steam, water, compressed air, inert industrial gases and certain oils which are in Group 2 of the above mentioned Pressure Equipment Directive. The PF5G and PF6G (DN15 - DN25 only) can also be used on propane or methane gases which are in Group 1 of the above Pressure Equipment Directive. The products' use on other fluids may be possible but, if this is contemplated, Spirax Sarco should be contacted to confirm the suitability of the product for the application being considered.

ii) Check material suitability, pressure and temperature and their maximum and minimum values. If the maximum operating limits of the product are lower than those of the system in which it is being fitted, or if malfunction of the product could result in a dangerous overpressure or overtemperature occurrence, ensure a safety device is included in the system to prevent such over-limit situations.

iii) Determine the correct installation situation and direction of fluid flow.

iv) Spirax Sarco products are not intended to withstand external stresses that may be induced by any system to which they are fitted. It is the responsibility of the installer to consider these stresses and take adequate precautions to minimise them.

v) Remove protection covers from all connections and protective film from all name-plates, where appropriate, before installation on steam or other high temperature applications.

1.2 Access

Ensure safe access and if necessary a safe working platform (suitably guarded) before attempting to work on the product. Arrange suitable lifting gear if required.

1.3 Lighting

Ensure adequate lighting, particularly where detailed or intricate work is required.

1.4 Hazardous liquids or gases in the pipeline

Consider what is in the pipeline or what may have been in the pipeline at some previous time. Consider: flammable materials, substances hazardous to health, extremes of temperature.

1.5 Hazardous environment around the product

Consider: explosion risk areas, lack of oxygen (e.g. tanks, pits), dangerous gases, extremes of temperature, hot surfaces, fire hazard (e.g. during welding), excessive noise, moving machinery.

1.6 The system

Consider the effect on the complete system of the work proposed. Will any proposed action (e.g. closing isolation valves, electrical isolation) put any other part of the system or any personnel at risk?
Dangers might include isolation of vents or protective devices or the rendering ineffective of controls or alarms. Ensure isolation valves are turned on and off in a gradual way to avoid system shocks.

1.7 Pressure systems

Ensure that any pressure is isolated and safely vented to atmospheric pressure. Consider double isolation (double block and bleed) and the locking or labelling of closed valves. Do not assume that the system has depressurised even when the pressure gauge indicates zero.

1.8 Temperature

Allow time for temperature to normalise after isolation to avoid danger of burns.

1.9 Tools and consumables

Before starting work ensure that you have suitable tools and/or consumables available. Use only genuine Spirax Sarco replacement parts.

1.10 Protective clothing

Consider whether you and/or others in the vicinity require any protective clothing to protect against the hazards of, for example, chemicals, high/low temperature, radiation, noise, falling objects, and dangers to eyes and face.

1.11 Permits to work

All work must be carried out or be supervised by a suitably competent person. Installation and operating personnel should be trained in the correct use of the product according to the Installation and Maintenance Instructions.
Where a formal 'permit to work' system is in force it must be complied with. Where there is no such system, it is recommended that a responsible person should know what work is going on and, where necessary, arrange to have an assistant whose primary responsibility is safety.
Post 'warning notices' if necessary.

1.12 Handling

Manual handling of large and/or heavy products may present a risk of injury. Lifting, pushing, pulling, carrying or supporting a load by bodily force can cause injury particularly to the back. You are advised to assess the risks taking into account the task, the individual, the load and the working environment and use the appropriate handling method depending on the circumstances of the work being done.

1.13 PTFE - Handling precautions

Within its working temperature range PTFE is a completely inert material, but when heated to its sintering temperature it gives rise to a gaseous decomposition product or fumes which can produce unpleasant effects if inhaled. The inhalation of these fumes is easily prevented by applying local exhaust ventilation to atmosphere as near to their source as possible.

Smoking should be prohibited in workshops where PTFE is handled because tobacco contaminated with PTFE will during burning give rise to polymer fumes. It is therefore important to avoid contamination of clothing, especially the pockets, with PTFE and to maintain a reasonable standard of personal cleanliness by washing hands and removing any PTFE particles lodged under the fingernails.

1.14 Residual hazards

In normal use the external surface of the product may be very hot. If used at the maximum permitted operating conditions the surface temperature of some products may reach temperatures of 180°C (356°F).

Many products are not self-draining. Take due care when dismantling or removing the product from an installation (refer to 'Maintenance instructions').

1.15 Freezing

Provision must be made to protect products which are not self-draining against frost damage in environments where they may be exposed to temperatures below freezing point.

1.16 Disposal

Unless otherwise stated in the Installation and Maintenance Instructions, this product is recyclable and no ecological hazard is anticipated with its disposal providing due care is taken. However, if the valve is fitted with a FKM or PTFE seat, special care must be taken to avoid potential health hazards associated with decomposition / burning of these seats.

FKM:

- **Can be landfilled, when in compliance with National and Local regulations.**
- **Can be incinerated, but a scrubber must be used to remove Hydrogen Fluoride, which is evolved from the product and with compliance to National and Local regulations.**
- **Is insoluable in aquatic media.**

PTFE:

- **Can only be disposed of by approved methods, not incineration.**
- **Keep PTFE waste in a separate container, do not mix it with other rubbish, and consign it to a landfill site.**

1.17 Returning products

Customers and stockists are reminded that under EC Health, Safety and Environment Law, when returning products to Spirax Sarco they must provide information on any hazards and the precautions to be taken due to contamination residues or mechanical damage which may present a health, safety or environmental risk. This information must be provided in writing including Health and Safety data sheets relating to any substances identified as hazardous or potentially hazardous.

2. General product information

2.1 Description

PF51G

A 2-port pneumatically actuated on/off valve for use on water, air, oil, and gases and can also be used on lower specification steam applications. **Note:** These valves are not suitable for vacuum conditions.

PF6_G

A 2-port normally open pneumatically actuated on/off valve for use on steam, water, air, oil and gases.

PF51G and PF6_G operation

A pneumatic signal acts on the actuator piston (depending upon seat position top or bottom) to open or close the valve. The valve plugs have a PTFE soft seal to provide tight shut-off. A position indicator is included on standard and flow regulator models.

Fig. 1 2-port pneumatically actuated on/off valve

2.2 Technical details

Leakage		PTFE soft seal	ASME Class VI
Flow characteristic		Fast opening	On/off
Flow direction	**NC - Normally closed**	Flow over seat	Port 1 to 2
	NO - Normally open	Flow under seat	Port 2 to 1
	BD - Bi-directional	Flow over seat	Port 1 to 2
		Flow under seat	Port 2 to 1
Pilot media		Air or water	60°C (140°F) maximum
Actuator rotation		360°	
Actuator type and size		**Pilot connection**	**Maximum pilot pressure**
	Type 1 = 45 mm (1¾") diameter	⅛" BSP	10 bar g (145 psi g)
	Type 2 = 63 mm (2½") diameter	¼" BSP	10 bar g (145 psi g)
	Type 3 = 90 mm (3½") diameter	¼"BSP	8 bar g (116 psi g)

2.3 K_{VS} values

Size		**DN15 ½"**	**DN20 ¾"**	**DN25 1"**	**DN32 1¼"**	**DN40 1½"**	**DN50 2"**
K_{VS}	**PG51G**	4.5	8.0	15.6	24.6	42.0	57.0
	PF6_G	4.5	8.0	15.6	24.6	42.0	57.0

For conversion: C_V (UK) = K_V x 0.963 C_V (US) = K_V x 1.156

2.4 Sizes, pipe connections and actuator combinations

Valve type	Pipe connections	Actuator type	DN15 ½"	DN20 ¾"	DN25 1"	DN32 1¼"	DN40 1½"	DN50 2"
PF51G	Screwed to BSP or NPT	**1**	•	•	•			
PF61G	Screwed to BSP or NPT							
PF62G	Butt weld to DIN 11850 pipe, ASME B 36.10 / ISO 65 pipe or ISO 4200 pipe	**2**	•	•	•	•	•	•
		3			•	•	•	•
PF63G	Flanged to EN 1092 or ASME Class 150 (welded on flanges)	**2**	•	•	•	•	•	•
		3			•	•	•	•
PF64G	Socket weld to ASME B 36.10 / ISO 65 pipe	**1**	•	•				
PF65G	Sanitary clamp to ISO 2852 or ASME BPE* **Note: clamp and clamp gasket are not included**	**2**	•	•	•	•	•	•
		3			•	•	•	•

* **Note:** The DN32 is not available with ASME BPE end connections.

2.5 Available range

Valve action	Screwed (BSP or NPT)		Butt weld	Flanged (EN 1092 or ASME)	Socket weld	Sanitary clamp
NC - Normally Closed (flow over seat)	PF51G-1NC	PF61G-1NC	PF62G-1NC	-	PF64G-1NC	PF65G-1NC
	PF51G-2NC	PF61G-2NC	PF62G-2NC	PF63G-2NC	PF64G-2NC	PF65G-2NC
	PF51G-3NC	PF61G-3NC	PF62G-3NC	PF63G-3NC	PF64G-3NC	PF65G-3NC
NO - Normally Open (flow under seat)	PF51G-1NO	PF61G-1NO	PF62G-1NO	-	PF64G-1NO	PF65G-1NO
	PF51G-2NO	PF61G-2NO	PF62G-2NO	PF63G-2NO	PF64G-2NO	PF65G-2NO
	PF51G-3NO	PF61G-3NO	PF62G-3NO	PF63G-3NO	PF64G-3NO	PF65G-3NO
BD - Bi-Directional normally closed (flow over or under seat)	PF51G-1BD	PF61G-1BD	PF62G-1BD	-	PF64G-1BD	PF65G-1BD
	PF51G-2BD	PF61G-2BD	PF62G-2BD	PF63G-2BD	PF64G-2BD	PF65G-2BD
	PF51G-3BD	PF61G-3BD	PF62G-3BD	PF63G-3BD	PF64G-3BD	PF65G-3BD

Optional extras: Travel switch (**I**) i.e.: PF61G-2BD-**I** and Flow regulator (**R**) i.e.: PF61G-2BD-**R**

2.6 Pressure / temperature limits

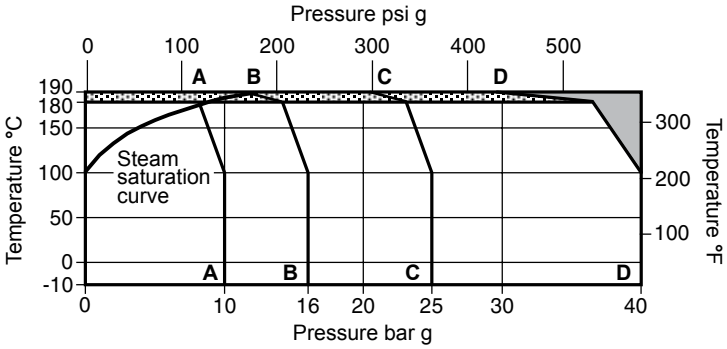

The product **must not** be used in this region or beyond the body design conditions quoted in the table below as damage to the internals will occur.

High temperature stem seals (Option **H**) are required for use in this region.

A - A PN10
B - B PN16 and ASME 150
C - C PN25
D - D PN40

Body design conditions	Screwed, butt weld, socket weld and flanged EN 1092	DN15 - DN25	(½" - 1")	PN40
		DN32 and DN40	(1¼" - 1½")	PN25
		DN50	(2")	PN16
	Flanged ASME	DN15 - DN50	(½" - 2")	Class 150
	Sanitary clamp compatible connections	DN15 - DN50		PN10
Maximum design pressure			Refer to the graph above	
Maximum design temperature		190°C	(374°F)	
Minimum design temperature		-10°C	(14°F)	
Maximum operating pressure for saturated steam service	Standard seals	9 bar g @ 180°C	(131 psi g @ 356°F)	
	High temperature seals - Option **H**	11.5 bar g @ 190°C	(167 psi g @ 374°F)	
Maximum operating temperature	Standard seals	180°C @ 9 bar g	(356°F @ 131 psi g)	
	High temperature seals - Option **H**	190°C @ 11.5 bar g	(374°F @ 167 psi g)	
Minimum operating temperature		-10°C	(14°F)	
Note: For lower operating temperatures consult Spirax Sarco.				
Ambient temperature limits		-10°C to +60°C	(14°F to 140°F)	
Designed for a maximum cold hydraulic test pressure of:			1.5 x body design conditions	
Note: Valves which are being subjected to hydraulic testing **must be** in the fully open position.				

3. Installation

Note: Before actioning any installation observe the 'Safety information' in Section 1.

Referring to the Installation and Maintenance Instructions, name-plate and Technical Information Sheet, check that the product is suitable for the intended installation:

3.1 Check materials, pressure and temperature and their maximum values. **Do not exceed the performance rating of the valve. Check the limiting conditions and the product label details for pilot pressure limitations.** If the maximum operating limit of the product is lower than that of the system in which it is being fitted, ensure that a safety device is included in the system to prevent overpressurisation.

3.2 Determine the correct installation situation and the direction of fluid flow.

3.3 Remove protective covers from all connections and protective film from all name-plates, where appropriate, before installation on steam or other high temperature applications.

3.4 **Caution: Butt weld and Socket weld versions** must have the actuator and valve stem removed prior to welding the body into the pipeline.
This can be carried out in one of two ways:
i - Undo the actuator cover to relax the spring force while retaining the valve body, then remove the actuator and valve stem.
ii - Apply air pressure at the inlet port of the actuator, which will compress the spring and remove the downward force, then remove the actuator and valve stem.

3.5 Support pipework should be used to prevent stresses being exerted on the valve body.

3.6 These valves can be mounted in any orientation. The actuator can also be rotated 360° in the direction indicated on the product label to facilitate easy pilot mounting and connection.

3.7 Ensure adequate space is provided for the removal of the actuator from the valve body for maintenance purposes:
- Type 1 (NC / NO / BD) = 52 mm
- Type 2 (NC / NO / BD) = 68 mm
- Type 3 (NC / NO / BD) = 92 mm

3.8 Isolate connecting pipework. Ensure it is clean from dirt, scale etc. Any debris entering the valve may damage the PTFE head seal preventing a tight shut-off.

3.9 A red travel indicator will appear in the actuator top cover when the valve is fully open. **Note:** The red travel indicator is fitted on all models with exception to those with the optional travel switch.

3.10 Check for leaks.

4. Commissioning

4.1 Flow regulator

This option will regulate the maximum flow of either the normally closed (NC) or normally open (NO) valves. The regulator can be used as a manual override for NO valves.

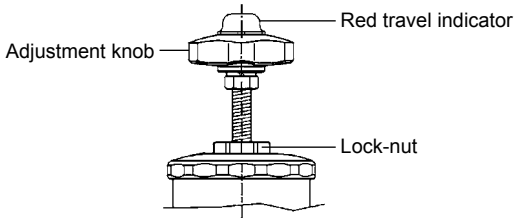

Fig. 2 Flow regulator

Flow regulation - NC (normally closed) valves:

1. Isolate the primary upstream and downstream valves.
2. Undo the flow regulator lock-nut.
3. Rotate the adjustment knob clockwise until the valve is fully closed. A red travel indicator will appear in the top of the handle.
4. Apply sufficient pilot pressure required to overcome the maximum differential pressure condition.
5. Open the primary upstream and downstream valves.
6. Gradually open the valve until the desired maximum flowrate is achieved.
7. Tighten the flow regulator lock-nut.
8. Exhaust the pilot media pressure to check for valve tight shut-off.
9. Apply pilot pressure again to check maximum flow condition.

Flow regulation - NO (normally open) valves:

1. Ensure that the flow regulator is fully open. Undo the flow regulator lock-nut.
2. With the primary medium flowing gradually close the valve using the flow regulator until the desired flowrate is achieved.
3. Tighten the flow regulator lock-nut.
4. Apply sufficient pilot media pressure to ensure the valve achieves tight shut-off.
5. Exhaust the pilot pressure to check maximum flow once again - adjust if necessary.

4.2 Travel switch

The travel switch will provide an electrical signal provided by a magnetic sensor and non contact switch to indicate valve open or closed position.

Relay rating:
Voltage (V) = 500 V
Current (I) = 0.5 A
Power (P) = 30 W/VA

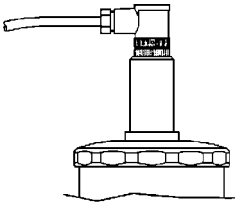

Fig. 3 Travel switch

4.3 Wiring connections

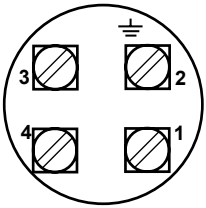

Terminals

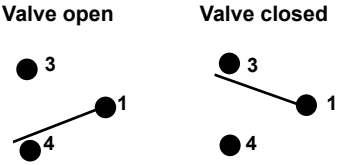

Fig. 4 Wiring connections

4.4 Solenoid valves (type DM - if fitted)

DM type solenoid valves should be mounted onto the piston actuator as shown below. To fit a solenoid valve onto a normally closed valve use the pilot connection marked 'NC', for normally open valves use the connection marked 'NO'. When using water as a pilot media, remove the cap from the exhaust connection and connect a drain line. **Note:** Maximum torque setting 12 N m (8.8 lbf ft).

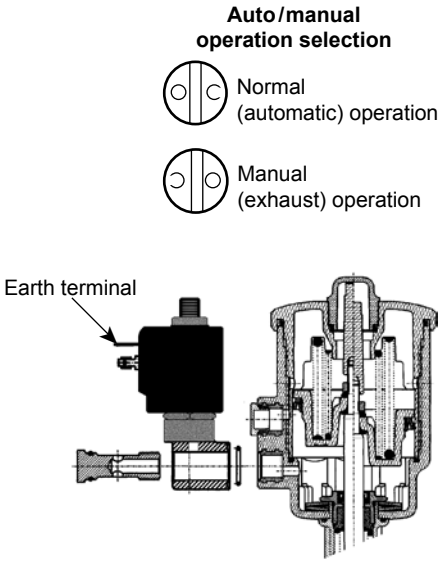

Fig. 5 DM solenoid valve mounting (normally closed valves)

5. Maintenance

Note: Before undertaking any maintenance on the valve observe the 'Safety Information' in Section 1.

5.1 General information

When removing the actuator and valve stem use one of the following methods:

i - Undo the actuator cover to relax the spring force while retaining the valve body, then remove the actuator and valve stem.

ii - Apply air pressure at the inlet port of the actuator, which will compress the spring and remove the downward force, then remove the actuator and valve stem.

5.2 How to fit a new seal kit:

A spare seal kit is available comprising: valve head seal (PTFE), stem 'O' ring, piston lip seal, body seal (and body 'O' ring for the type PF6_G). **To replace these items proceed as follows:**

- Isolate the upstream and downstream valves.
- Vent the pilot pressure from the actuator and disconnect the pilot pipework / solenoid valve.
- Remove the piston actuated valve from the pipeline.
- Remove the valve body and inspect the valve head seal. Replace if necessary. **Caution:** Before removing the valve body on normally closed valves, the spring pressure acting down onto the valve head seal should be relaxed to prevent damage. This can be carried out in one of two ways, see Section 5.1.

  If a replacement valve head seal is required, remove the retaining cap nut whilst holding the valve head firmly (two flats are provided on the valve head for this purpose). Fit a new (PTFE) valve head seal and refit the retaining cap nut applying Loctite 620 to the threaded portion of the stem. Tighten the cap nut to 13 N m (9.5 lbf ft). Replace the valve body and tighten the bonnet to the recommended torque as specified in Table 1.
- To inspect or replace the stem 'O' ring or piston lip seal, remove the actuator housing cover whilst holding the valve body firmly. **Warning: The internal spring is under compression.** Remove the valve body as previously described in Section 5.1.
- Whilst holding the valve head, unscrew the red travel indicator and stem lock-nut and remove together with the two washers.
- Remove the piston, stem 'O' ring and washer. Inspect the piston lip seal and 'O' ring and replace if required.
- Clean out any dirt or waste deposits from inside the piston housing area and carefully apply Viton compatible inert grease to the 'O' ring and piston lip seal.
- Reassemble in reverse order referring to the drawings showing correct location of components. Whilst holding the valve head, tighten the stem lock-nut. Replace the red travel indicator and finger tighten.
- Refit the actuator cover and tighten to the following tightening torques:

Type 1 NC	= 18 to 22 N m	(13.3 to 16.2 lbf ft)
Type 1 NO	= 10 N m	(7.37 lbf ft)
Type 2 and Type 3	= 56 to 60 N m	(41.3 to 44.2 lbf ft)

- Refit the valve body replacing the body seal (and body 'O' ring type PF61G) and tighten the bonnet to the recommended torque as specified in Table 1.

Table 1 Body / bonnet recommended tightening torque - N m (lbf ft)

Valve size	Torque	Valve size	Torque
DN15 ½"	55 (40)	DN32 1¼"	80 (59)
DN20 ¾"	55 (40)	DN40 1½"	110 (81)
DN25 1"	80 (59)	DN50 2"	110 (81)

Fig. 6 NC (Normally Closed) and BD (Bi-Directional normally closed valves)

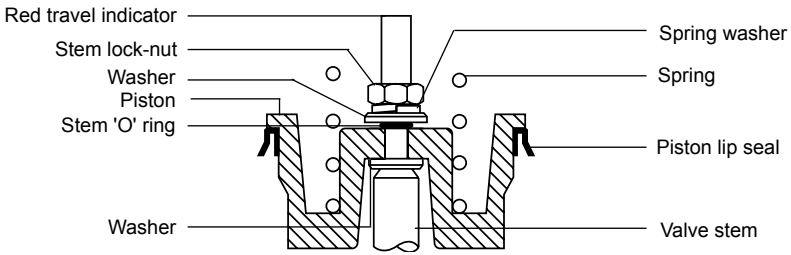

Fig. 7 NO (Normally Open) valves

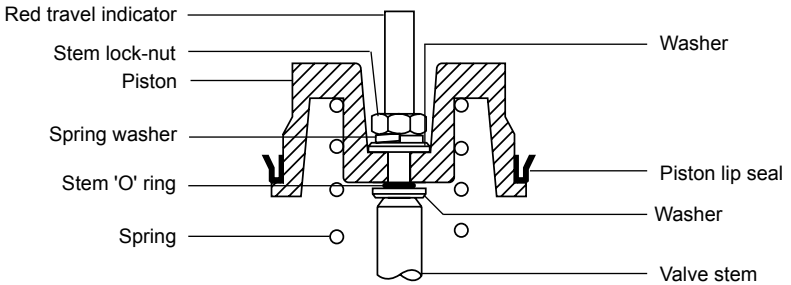

Fig. 8 Plug and seat seal arrangement

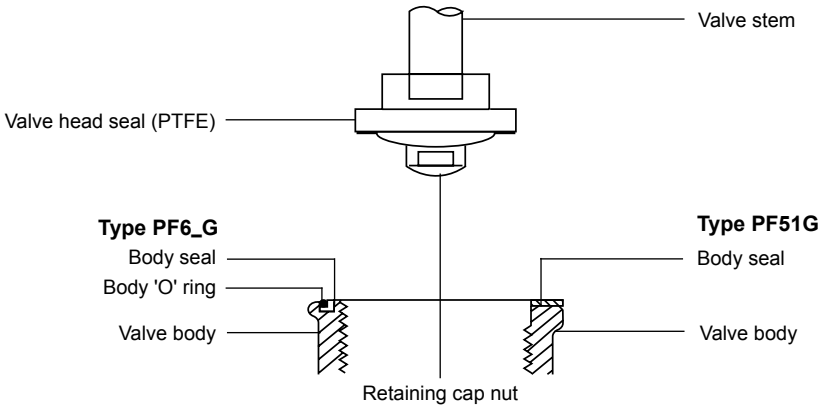

Available spares

A spare seal kit is available comprising: valve head seal (PTFE), stem 'O' ring, piston lip seal, body seal (and body 'O' ring for the type PF6_G).

NC (Normally Closed) valves

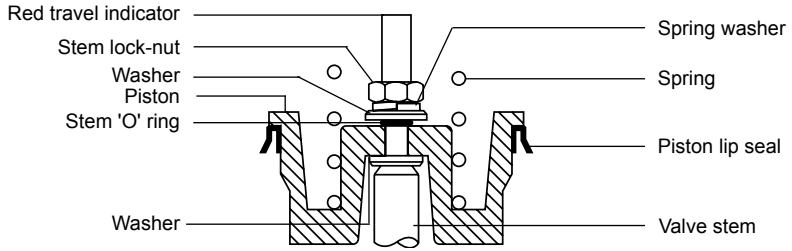

NO (Normally Open) valves

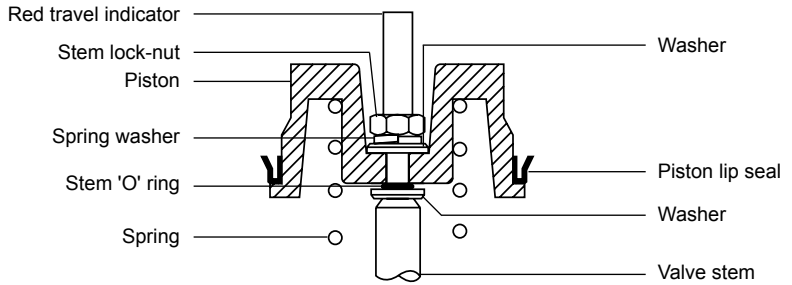

BD (Bi-Directional normally closed) valves

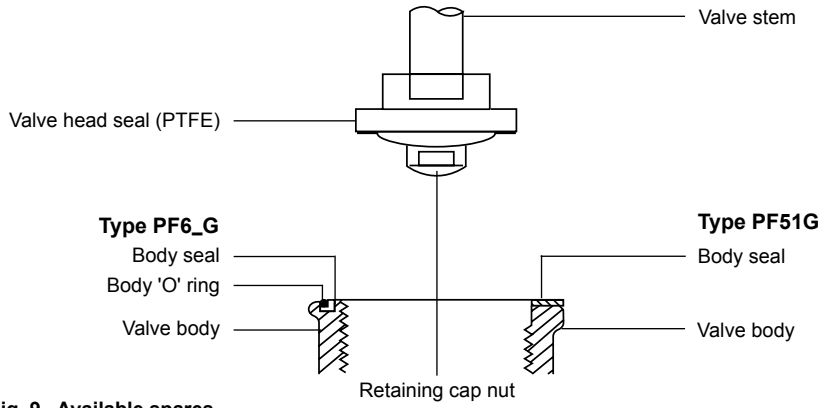

Fig. 9 Available spares

How to order a spare seal kits

Always order spares by specifying the valve size, type and date code (month and year) given on the actuator label i.e.: 06 / 02 (June 2002).

Example: 1 - Seal kit for a 1" PF51G-2NO, date code 06 / 02