spirax sarco

SDCV3, SDCV4, SDCV7 and SDCV8 Split Disc Check Valves

Installation and Maintenance Instructions

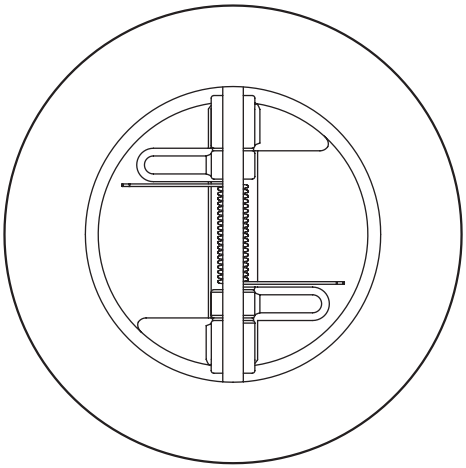

spirax sarco

1. General safety information

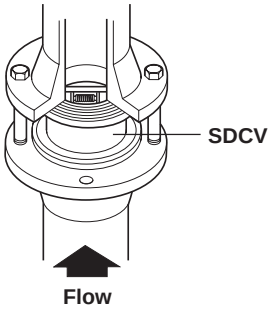

Fig. 1 SDCV disc check valve shown sandwiched between flanged connections

Safe operation of the unit can only be guaranteed if it is properly installed, commissioned and maintained by a qualified person (see Section 11 of the attached Supplementary Safety Information) in compliance with the operating instructions. General installation and safety instructions for pipeline and plant construction, as well as the proper use of tools and safety equipment must also be complied with.

Isolation

Consider whether closing isolating valves will put any other part of the system or personnel at risk. Dangers might include; isolation of vents and protective devices or alarms. Ensure isolation valves are turned off in a gradual way to avoid system shocks.

Pressure

Before attempting any maintenance consider what is or may have been in the pipeline. Ensure that any pressure is isolated and safely vented to atmospheric pressure before attempting to maintain the product, this is easily achieved by fitting Spirax Sarco depressurisation valves type DV (see separate literature for details). Do not assume that the system is depressurised even when a pressure gauge indicates zero.

Temperature

Allow time for temperature to normalise after isolation to avoid the danger of burns and consider whether protective clothing (including safety glasses) is required.

Fluoroelastomer 'O' ring:

If the Fluoroelastomer 'O' ring has been subjected to a temperature approaching 315°C (599°F) or higher it may have decomposed and formed hydrofluoric acid. Avoid skin contact and inhalation of any fumes as the acid will cause deep skin burns and damage the respiratory system.

Disposal

These products are recyclable. No ecological hazard is anticipated with the disposal of these products providing due care is taken, EXCEPT:

Fluoroelastomer 'O' ring:

- **Waste parts can be landfilled, when in compliance with National and Local regulations.**
- **Parts can be incinerated, but a scrubber must be used to remove Hydrogen Fluoride, which is evolved from the product and with compliance to National and Local regulations.**
- **Parts are insoluble in aquatic media.**

2. General product information

2.1 General description

SDCV split disc check valves are of a wafer pattern, designed to be sandwiched between ANSI/JIS/KS and PN flanges. Their function is to prevent reverse flow on a wide variety of fluids. The SDCV4 and SDCV8 are designed for use with agressive fluids, vapours, acids and alkalines at high pressures and temperatures. The SDCV3 and SDCV7 are manufactured from carbon steel and are suitable for use in general purpose applications on steam and fluids at high pressures and lower temperatures. The face-to-face dimension of the SDCV3, SDCV4, SDCV7 and SDCV8 conforms to API 594 and seat leakage to API 598.
As standard the valves have a metal-to-metal seat. An optional soft seat is available made of Fluoroelastomer but must be requested at the point of order placement as the body will be stamped with the letter 'V'. Other options are available on request including a heavy spring 0.45 bar g (6.5 psi g).
Note: For additional information see the following Technical Information Sheets:

Product	Body material	Flange compatability	TI reference
SDCV3	Carbon steel	ANSI/JIS and KS flanges	TI-P601-04
SDCV7	Carbon steel	PN flanges	TI-P601-06
SDCV4	Austenitic stainless steel	ANSI/JIS and KS flanges	TI-P601-05
SDCV8	Austenitic stainless steel	PN flanges	TI-P601-07

2.2 Sizes and pipe connections

DN50, DN80, DN100, DN150, DN200, DN250 and DN300.

Carbon steel bodied (ASTM A216 WCB) versions are suitable for installation between the following flanges:

SDCV3	ANSI 150 and ANSI 300 flanges
	JIS 10K, JIS 20K, KS 10K and KS 20K flanges
SDCV7	PN16 and PN40 flanges

Austenitic stainless steel bodied (ASTM A351 CF8M) versions are suitable for installation between the following flanges:

SDCV4	ANSI 150 and ANSI 300 flanges
	JIS 10K, JIS 20K, KS 10K and KS 20K flanges
SDCV8	PN16 and PN40 flanges

2.3 Materials

Part		Material
Body	SDCV3 and SDCV7	Carbon steel (WCB)
	SDCV4 and SDCV8	Austenitic stainless steel (316)
Plates		Austenitic stainless steel (316)
Hinge/stop pin		Austenitic stainless steel (316)
Spring		Inconel-X
Retainer plugs		Austenitic stainless steel (316)
Eye bolt (DN150 to 300, ANSI 600 only)		Carbon steel
Soft seat (optional)		Fluoroelastomer

Note: Valve bodies that are marked with a 'V' have a Fluoroelastomer seating face fitted.
Valve bodies that are marked with a 'H' have a heavy spring fitted.

2.4 K_V values

Size	DN50	DN80	DN100	DN150	DN200	DN250	DN300
K_V	40	111	226	611	1 188	2 205	3 299

For conversion: C_V (UK) = K_V x 0.963 C_V (US) = K_V x 1.156

2.5 Opening pressures in mbar

Differential pressures with zero flow.

→ Flow direction

Direction	DN50	DN80	DN100	DN150	DN200	DN250	DN300
↑	48	45.5	43	43	39	40	46
→	30	30.0	26	27	16	16	17

Note: With a heavy spring fitted the opening presure is 0.45 bar g (6.5 psi g).

2.6 Pressure / temperature limits

		SDCV3	SDCV4	SDCV7	SDCV8
Body design conditions		ANSI 300	ANSI 300	PN40	PN40
PMA - Maximum allowable pressure		51 bar g (740 psi g)	49 bar g (710 psi g)	40 bar g (580 psi g)	40 bar g (580 psi g)
TMA - Maximum allowable temperature		400°C (752°F)	538°C (1000°F)	400°C (752°F)	500°C (932°F)
Minimum allowable temperature		-10°C (14°F)	-29°C (-20°F)	-10°C (14°F)	-29°C (-20°F)
PMO - Maximum operating pressure		51 bar g (740 psi g)	38 bar g (551psi g)	40 bar g (580psi g)	40 bar g (580 psi g)
TMO - Maximum operating temperature	Metal seat	400°C (752°F)	538°C (1000°F)	400°C (752°F)	500°C (932°F)
	Fluoroelastomer soft seat	200°C (392°F)	200°C (392°F)	200°C (392°F)	200°C (392°F)
Minimum operating temperature	Metal seat	-10°C (14°F)	-29°C (-20°F)	-10°C (14°F)	-29°C (-20°F)
	Fluoroelastomer soft seat	-10°C (14°F)	-29°C (-20°F)	-10°C (14°F)	-29°C (-20°F)
Designed for a maximum cold hydraulic test pressure of:		76 bar g (1102 psi g)	76 bar g (1102 psi g)	60 bar g (870 psi g)	60 bar g (870 psi g)

SDCV3

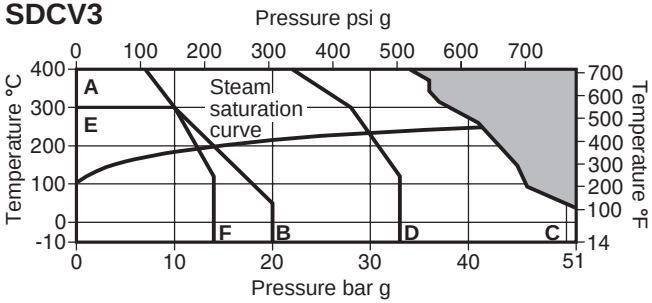

The product **must not** be used in this region.

A - B ANSI 150
A - C ANSI 300
A - D JIS/KS 20K
E - F JIS/KS 10K

SDCV4

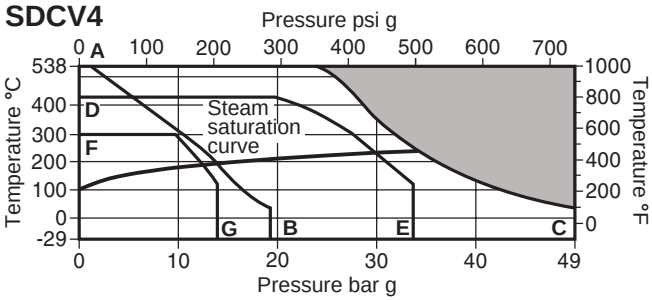

The product **must not** be used in this region.

A - B ANSI 150
A - C ANSI 300
D - E JIS/KS 20K
F - G JIS/KS 10K

SDCV7

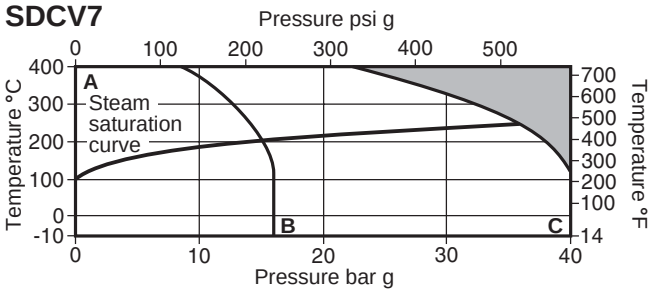

The product **must not** be used in this region.

A - B PN16 flanges
A - C PN40 flanges

SDCV8

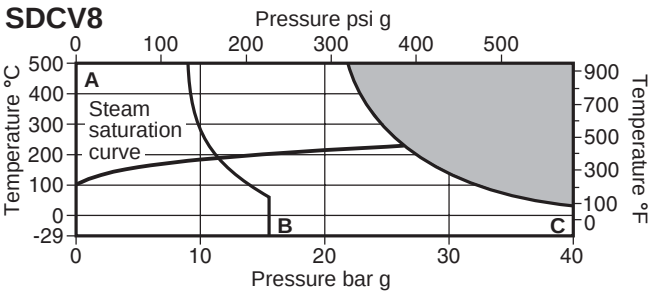

The product **must not** be used in this region.

A - B PN16 flanges
A - C PN40 flanges

3. Installation

Note: Before actioning any installation observe the 'Safety information' in Section 1.

Referring to the Installation and Maintenance Instructions, name-plate and Technical Information Sheet, check that the product is suitable for the intended installation:

3.1 Check materials, pressure and temperature and their maximum values. If the maximum operating limit of the product is lower than that of the system in which it is being fitted, ensure that a safety device is included in the system to prevent overpressurisation.

3.2 Determine the correct installation situation and the direction of fluid flow.

3.3 Remove protective covers from all connections.

3.4 Before installing the SDCV remove the corrosion inhibitor from the flange faces and clean the machined faces on the disc and body seats using paraffin or a similar liquid. This will remove the last traces of protective coating.

3.5 Split disc check valves simply fit between two pipe flanges (see Fig. 1). Standard gaskets are used either side of the valve together with longer bolts or studs. **Note: Fanges, bolts (or studs), nuts and joint gaskets are to be provided by the installer.** Normal sensible flange practice should be followed e.g. torque tightening the bolts in opposite sequence.
Install the SDCV in the pipeline checking that it has been fitted with the flow in the direction of the arrow on the valve body. If the valve is in a horizontal pipeline the hinge pin **must be** in the vertical position for correct operation.
Split disc check valves can be installed with the liquid/gas flowing horizontally into the valve (Fig. 2 valve shown in the open position), or with the liquid/gas flowing vertically upwards through the valve (Fig. 3 valve shown in the closed position). Split disc check valves are not recommended for installation with the liquid/gas flowing vertically down through the valve.

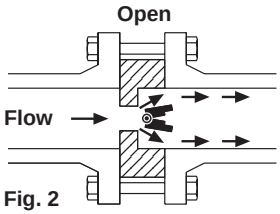

Fig. 2

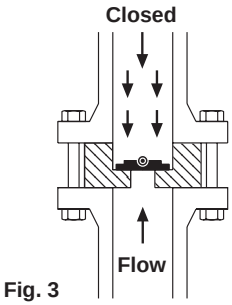

Fig. 3

3.6 Split disc check valves are not suitable for use where heavily pulsating flow exists, such as close to a compressor.

3.7 Ensure suitable slinging/lifting/support equipment and procedures are used relevant to the valve size and weight.

3.8 Where valves are used on on boiler sequencing applications it is recomended that they are fitted with an Fluoroelastomer soft seat as a minimum. An optional heavier spring (cracking pressure is 0.45 bar g (6.5 psi g)) may also help especially where pressure accumulation is slow to build up.

4. Commissioning

After installation or maintenance ensure that the system is fully functional. Carry out tests on any alarms or protective devices.

5. Operation

Disc check valves are opened by the pressure of the fluid and closed by the spring as soon as the flow ceases and before the reverse flow occurs.

6. Maintenance

Before actioning any maintenance programme observe the 'Safety information' in Section 1.

6.1 Before undertaking any maintenance on the valve it must be isolated from both the supply line and return line and any pressure allowed to safely normalise to atmosphere. The valve should then be allowed to cool. When reassembling, ensure that all joint faces are clean.

6.2 Valves with ANSI 600 flanges (sizes DN150 and upwards) have an eyebolt to improve the handling of the product.

6.3 Remove the valve from the pipeline by loosening all flange nuts and removing sufficient bolts or studs to allow the valve to be withdrawn from between the flanges. **Note:** Ensure suitable slinging/lifting/support equipment and safety procedures are used relevant to the valve size and weight.

6.4 Clean the valve removing any agressive media. Valves should be checked every 6 months.

6.5 To replace the internals:

- Remove the retainer plugs (**5**) and withdraw the pins (**3**) carefully ensuring they are clearly identified.
- Remove the plates (**2**) and spring (**4**) ensuring the plates are clearly identified for each side of the valve.
- Clean all parts and replace all worn or damaged components.
- Replace the plates (**2**) ensuring they are in the same position as when removed.
- Fit a new spring (**4**) over the plates (**2**). Insert and locate pins into the body ensuring the correct location of the spring.
- Refit the retainer plugs (**5**) and tighten. There should be no more than 2 threads showing. **Note:** Always use an anti-seize/sealant compound.
- Manually check the valve for correct operation.
- Refit the valve into the pipeline using the correct new gaskets.
- Torque tighten the flange bolts in opposite sequence (normal sensible flange practice).
- Check for leaks.

	Retainer plug
DN50 - DN125	⅛" NPT
DN150	¼" NPT
DN200	⅜" NPT
DN250	½" NPT

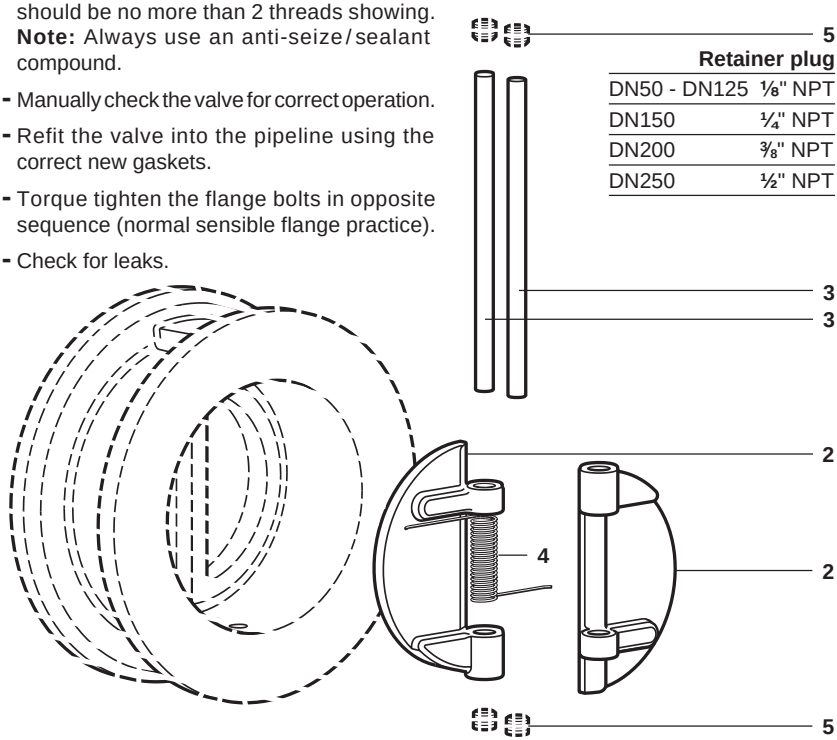

Fig. 4

Spare parts

The spare parts available are shown in solid outline. Parts drawn in broken line are not supplied as spares.

Available spares	
Overhaul kit	**2** (2 off), **3** (2 off), **4**

How to order spares

Always order spares by using the description given in the column headed 'Available spares' and state the size and type of check valve.

Example: 1 - Overhaul kit for a DN200 Spirax Sarco SDCV3 split disc check valve with metal seat.

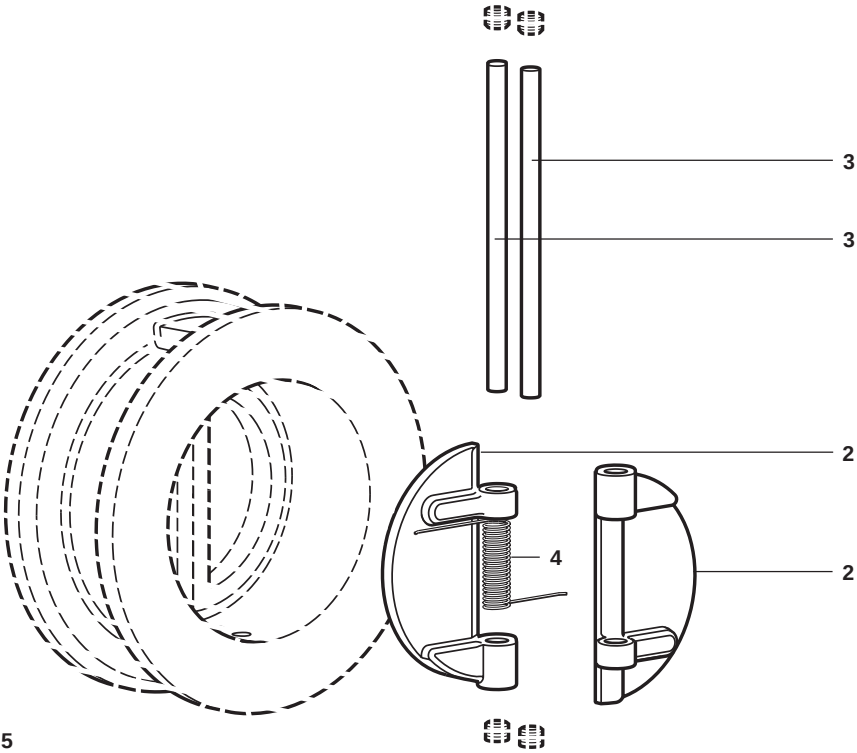

Fig. 5