Cert. No. LRQ 0963008

ISO 9001

TI-P623-07
ST Issue 2

ABL Series
Bimetallic Steam Traps

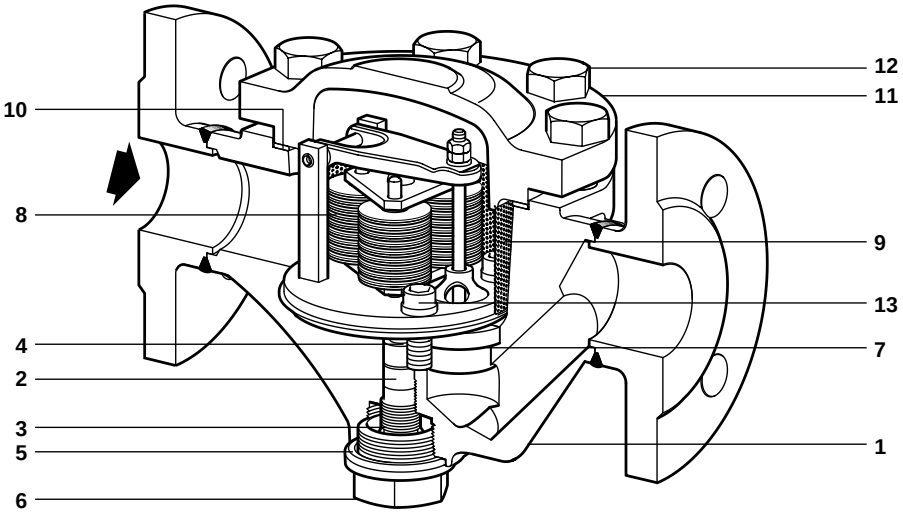

Description

The ABL range of bimetallic steam traps are made of forged steel. They have a check valve, a built in strainer screen and an external device for adjusting the discharge temperature of the condensate. They are designed for high capacity constant pressure process applications.

These steam traps operate with no loss of steam and quickly drain air, non-condensable gases and large quantities of cold water on start-up.

Sizes and pipe connections

1½" and 2" screwed BSP/NPT and socket weld ends (ANSI B 16.11) DN40 and DN50 with PN40, PN64, ANSI 150, ANSI 300 and ANSI 600 flanges

Limiting conditions

Body design conditions		Class 600
PMO - Maximum operating pressure	ABL405 / ABL505	5 bar g
	ABL414 / ABL514	14 bar g
	ABL425 / ABL525	25 bar g
	ABL440 / ABL540	40 bar g
TMO - Maximum operating temperature		400°C
Minimum operating pressure		0.1 bar g
ΔPMX - The back pressure for correct operation must not exceed 90% of the upstream pressure.		
Designed for a maximum cold hydraulic test pressure of 150 bar g		

Materials

No.	Part		Material	
1	Body sub assembly		Steel	ASTM A105 N
2	Gland packing		Graphite	
3	Gland nut		Stainless steel	ASTM A276 316L
4	Adjustment pin		Stainless steel	ASTM A276 316L
5	Cap gasket	ABL405 / ABL505	Copper / graphite	
		ABL414 / ABL514	Copper / graphite	
		ABL425 / ABL525	Copper / graphite	
		ABL440 / ABL540	Stainless steel / graphite	
6	Cap		Steel	ASTM A105
7	Element gasket		Graphite / stainless steel	
8	Bimetallic element		Stainless steel	
9	Strainer screen		Stainless steel	AISI 304L
10	Cover gasket	ABL405 / ABL505	Copper / graphite	
		ABL414 / ABL514	Copper / graphite	
		ABL425 / ABL525	Copper / graphite	
		ABL440 / ABL540	Stainless steel / graphite	
11	Cover		Steel	ASTM A105
12	Cover bolt		Steel	ASTM A193 B7
13	Element screw		Steel	

Certification

This product is available with certification to EN 10204 3.1.B.
Note: All certification / inspection requirements must be stated at the time of order placement.

Operating range

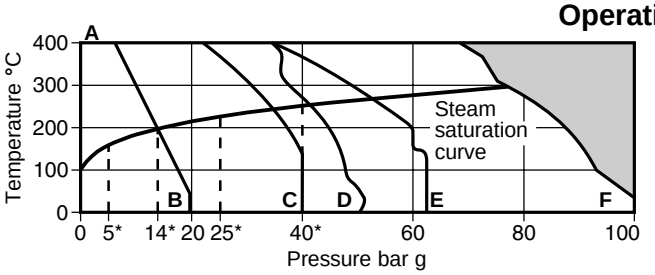

The product must not be used in this region.

*PMO Maximum operating pressure (see Limiting conditions).

A - B Flanged ANSI 150
A - C Flanged PN40
A - D Flanged ANSI 300
A - E Flanged PN64
A - F Flanged ANSI 600, screwed and socket weld

Local regulations may restrict the use of this product to below the conditions quoted.
In the interests of development and improvement of the product, we reserve the right to change the specification.

Dimensions / weights (approximate) in mm and kg

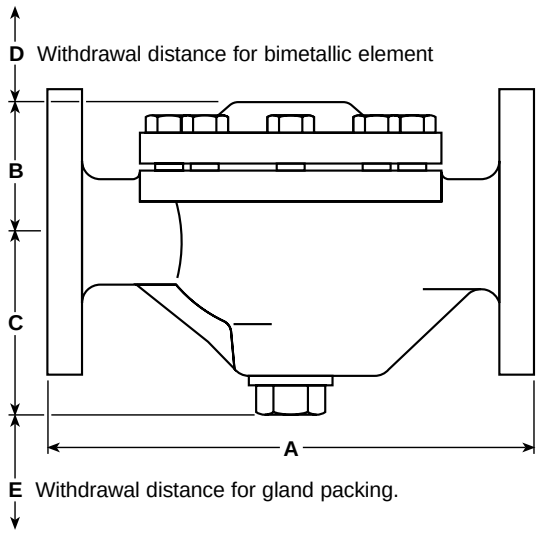

Size	Connections	A	B	C	D	E	Weight
1½" - 2"	BSP / NPT / SW	270	75	100	150	100	13.0
DN40	PN40	270	75	100	150	100	17.0
	PN64	290	75	100	150	100	20.0
	ANSI 150	270	75	100	150	100	15.0
	ANSI 300	270	75	100	150	100	18.0
	ANSI 600	290	75	100	150	100	19.0
DN50	PN40	270	75	100	150	100	17.0
	PN64	290	75	100	150	100	20.0
	ANSI 150	270	75	100	150	100	15.0
	ANSI 300	270	75	100	150	100	18.0
	ANSI 600	320	75	100	150	100	19.0

Safety information, installation and maintenance

For full details see the Installation and Maintenance Instructions (IM-P623-05) supplied with the product.

How to order

Example: 1 off DN40 Spirax Sarco ABL405 bimetallic steam trap with PN40 flanges.

Capacities

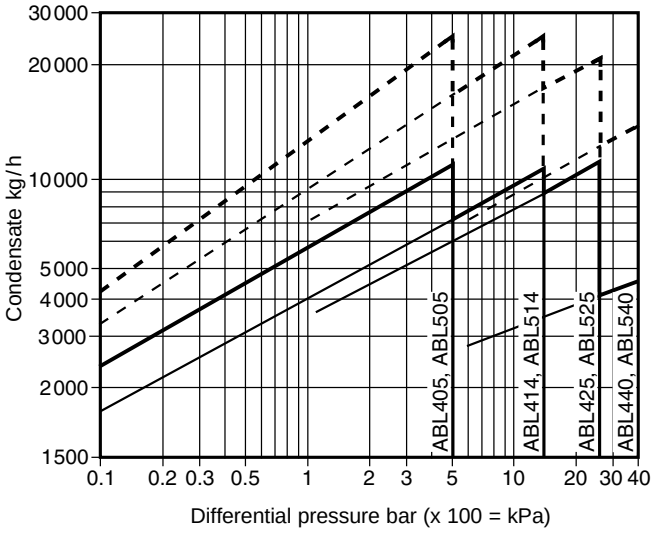

Hot water capacity ——— Cold water capacity - - - - -

Spare parts

The spare parts available are detailed below. No other parts are supplied as spares.

Available spare

Bimetallic assembly kit	**5, 7, 8, 9, 10**

How to order spares

Always order spares by using the description given in the column headed 'Available spare' and state the size and model of the bimetallic steam trap.

Example: 1 - Bimetallic assembly kit for a 1½" Spirax Sarco ABL405 bimetallic steam trap.

Recommended tightening torques

Item		or mm	N m
4		5 A/F	
6		36 A/F	100 - 110
12	405, 414, 425 505, 514, 525	24 A/F	70 - 77
	440, 540	24 A/F	120 - 132
13		8 mm socket	10.8 - 13.2