Cert. No. LRQ 0963008

ISO 9001

TI-P615-06
ST Issue 2

IFT54 Carbon Steel Ball Float Steam Trap with Integral Spiratec Sensor and Flanged Connections

Description

The IFT54 is a carbon steel ball float steam trap fitted with an integral Spiratec sensor (SSI) for steam leakage detection and integral thermostatic air vent for the prompt removal of large condensate loads from steam systems. The trap is supplied with integrally flanged connections (for horizontal or vertical installation) and can be maintained without disturbing the pipework. Body and cover are produced by TÜV approved foundries.

Available options: IFT54H - Horizontal flow. **IFT54V** - Vertical flow.

Sensors are compatible with Spiratec indicators, automatic monitors and test points:
R1 (single trap) remote test point,
R12 (12 trap) remote test point,
Type 30 hand held indicator,
R16C (16 trap) automatic steam trap monitor with PNP/NPN output where appropriate.

Standards
This product fully complies with the requirements of the European Pressure Equipment Directive 97/23/EC and carries the CE mark when so required.

Certification
This product is available with certification to EN 10204 3.1. **Note:** All certification/inspection requirements must be stated at the time of order placement.

Sizes and pipe connections

DN15, DN20, DN25, DN40 and DN50.
Standard flange EN 1092 PN40 (formerly DIN 2501).
Face-to-face dimensions to BS EN 26554 Series 1.

Optional extras

If requested at the point of order the cover can be drilled and tapped for the purpose of fitting a balance line and drain cock.

Pressure/temperature limits

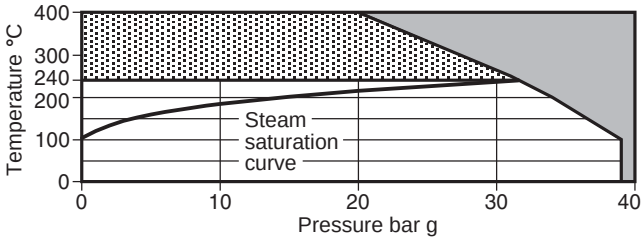

The product **must not** be used in this region.

The product should not be used in this region due to the limitations of the sensor.

Body design conditions		PN40
PMA	Maximum allowable pressure	40 bar g @ 100°C
TMA	Maximum allowable temperature	400°C @ 21 bar g
Minimum allowable temperature		-10°C
PMO	Maximum operating pressure for saturated steam service	32 bar g
TMO	Maximum operating temperature	240°C @ 32 bar g
Minimum operating temperature		0°C
Note: For lower operating temperatures consult Spirax Sarco.		
ΔPMX	Maximum differential pressure	See overleaf.
Designed for a maximum cold hydraulic test pressure of 60 bar g		

Caution: The trap in its complete operational form must not be subjected to a pressure of greater than 48 bar otherwise damage to the internal mechanism may result.

IFT54V DN15

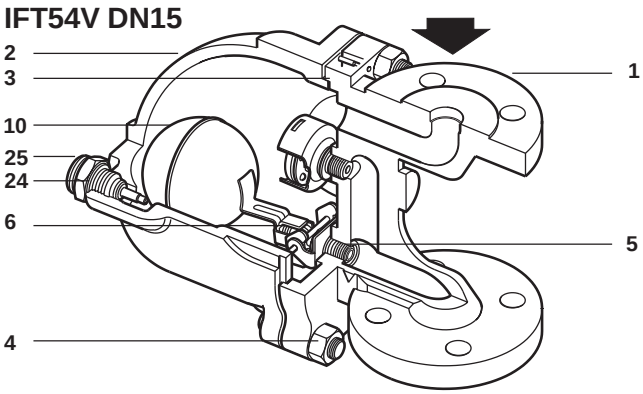

IFT54H DN40

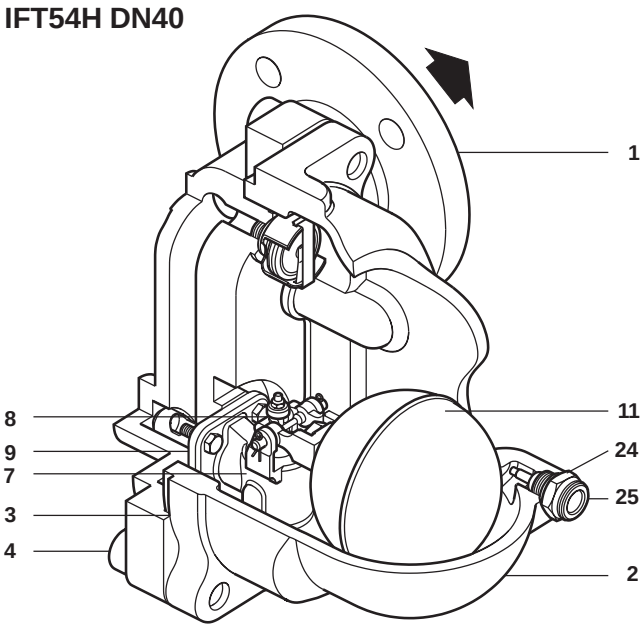

Materials

No.	Part		Material	
1	Body		Carbon steel	1.0619+N
2	Cover		Carbon steel	1.0619+N
3	Cover gasket		Reinforced exfoliated graphite	
4	Cover bolts	FT54H	Steel	24 CrMo 5 (1.7258)
	Cover studs	FT54V	Steel	24 CrMo 5 (1.7258)
	Cover nuts	FT54V	Steel	CK 35 (1.1181)
5	Valve seat	(DN15-25)	Stainless steel	X 22 CrNi 17 2 (1.4057)
6	Valve	(DN15-25)	Stainless steel	X 105 CrMo 17 (1.4125)
7	Valve seat	(DN40-50)	Stainless steel	X 22 CrNi 17 2 (1.4057)
8	Valve	(DN40-50)	Stainless steel	X 22 CrNi 17 2 (1.4057)
9	Main valve gasket		Exfoliated graphite	
10	Ball float		Stainless steel	X 5 CrNi 18 10 (1.4301)
11	Ball float		Stainless steel	X 5 CrNi 18 10 (1.4301)
24	Sensor gasket		Stainless steel	BS 1449 304 S16
25	Sensor		Stainless steel	BS 1449 304 S16

Note: All other internals are manufactured in stainless steel.

Local regulations may restrict the use of this product to below the conditions quoted.
In the interests of development and improvement of the product, we reserve the right to change the specification.

© Copyright 2005

Dimensions/weights (approximate) in mm and kg

IFT54H

Size	A	B	C	D	E	Weight
DN15	150	48	126	151	119	7.5
DN20	150	53	126	151	119	8.0
DN25	160	58	126	151	119	8.5
DN40	230	75.5	192	208	168	27.0
DN50	230	83	192	208	168	28.0

IFT54V

Size	A	B	D	E	F	G	Weight
DN15	150	48	214	119	96	175	7.5
DN20	150	53	214	119	106	175	8.0
DN25	160	58	221	119	116	175	8.5
DN40	230	75.5	312	168	151	255	29.0
DN50	230	83	312	168	166	255	30.0

IFT54H DN15 - DN50

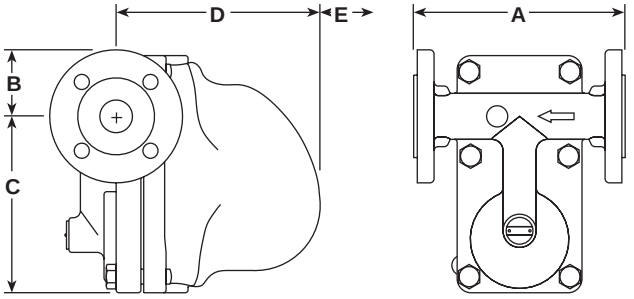

IFT54V DN15 - DN50

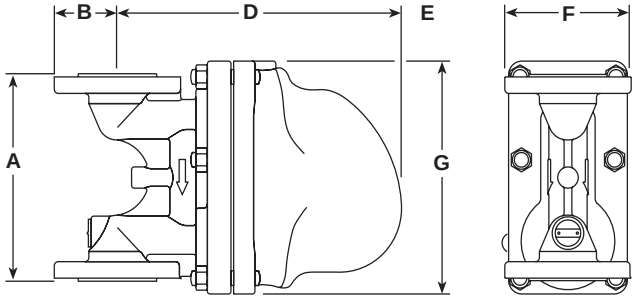

ΔPMX - Maximum differential pressures

Size and model	IFT54H-4 IFT54V-4	IFT54H-4.5 IFT54V-4.5	IFT54H-8 IFT54V-8	IFT54H-10 IFT54V-10	IFT54H-12 IFT54V-12	IFT54H-20 IFT54V-20	IFT54H-28 IFT54V-28	IFT54H-32 IFT54V-32
DN15, DN20 and DN25	4 bar	-	8 bar	-	12 bar	20 bar	-	32 bar
DN40 and DN50	-	4.5 bar	-	10 bar	-	-	28 bar	-

Capacities (in accordance with ISO 7842)

Capacities shown are based on boiling hot condensate.

DN15, DN20 and DN25

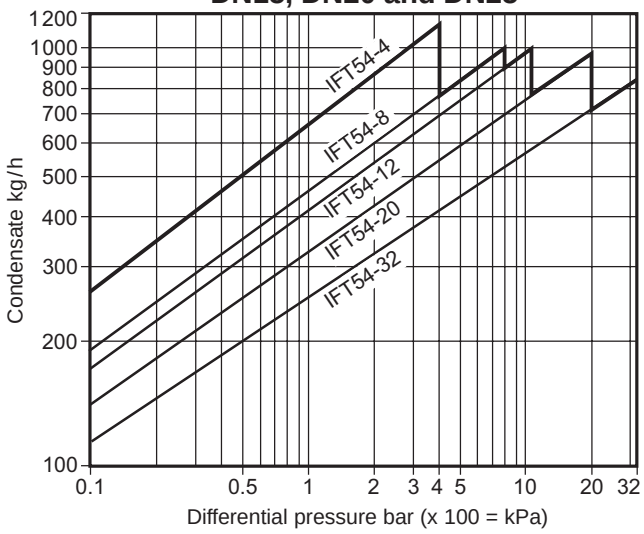

DN40 and DN50

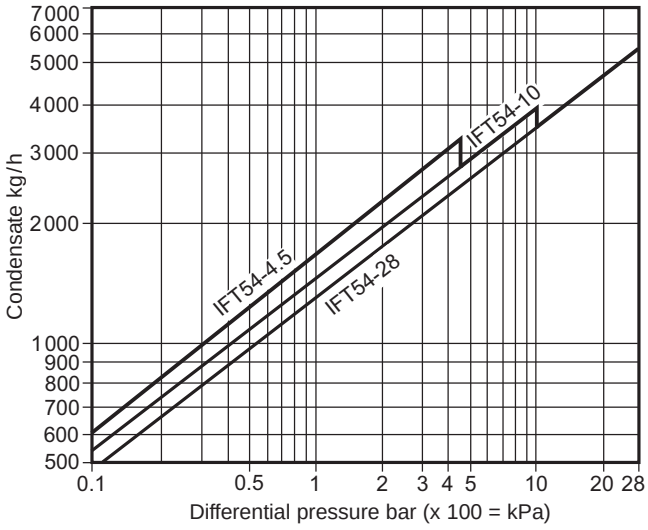

Additional cold water capacities from thermostatic air vent under start-up conditions

Under start-up conditions when the condensate is cold the internal thermostatic air vent will be open and provides additional capacity to the main valve. The Table below gives the minimum additional cold water capacities from the air vent.

Minimum additional cold water capacities from the air vent (kg/h)

Pressure (bar)	0.5	1	2	3	4	4.5	8	10	12	16	20	28	32
DN15, DN20 and DN25	460	680	900	1080	1250	-	1700	-	2000	2250	2550	-	3000
DN40 and DN50	460	680	900	1080	-	1300	1700	1900	-	2250	2550	2900	-

How to order

Example: 1 off Spirax Sarco DN40 IFT54H-4.5 ball float steam trap with a carbon steel body and cover having an integral sensor (SS1) to identify steam leakage. Flanged connections to EN 1092 PN40. Trap to be fitted with the optional balance and drain connections.

Spare parts

See TI-P615-05 for relevant information.