Cert. No. LRQ 0963008

ISO 9001

TI-P401-08
AB Issue 3

RFS1 and RFS2
Recirculating Feedwater Spray Systems

- Increases flash steam condensing capability
- Improves thermal efficiency of the feedtank
- Improves deaeration within the feedtank
- Energy saving three speed pump

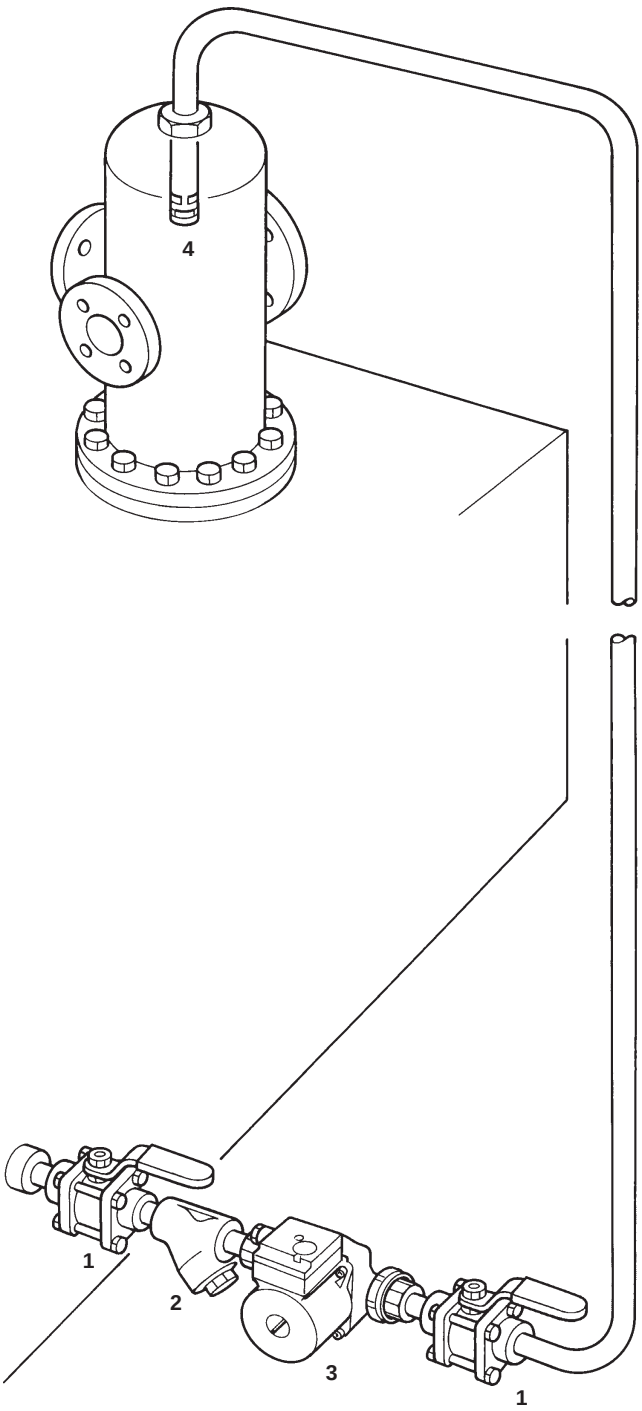

Description

The Spirax Sarco RFS1 and RFS2 recirculating feedwater spray systems are designed to provide additional flash steam condensing capacity on boiler feedtank applications. When the condensate return flowrate is high and the cold make-up flowrate is intermittent it is likely that valuable flash steam will be lost through the vent. To ensure that this flash steam is condensed it is often worthwhile to take feedwater from a relatively cool part of the feedtank and pump it to a spray nozzle. Approximately 20% of the feedtank content can be circulated per hour to provide this additional flash condensing capacity. By using a low energy pump the thermal efficiency of the feedtank can be improved.

Application

The RFS1 and RFS2 systems are specifically designed for use with Spirax Sarco flash condensing deaerator heads. The mixing unit of each head is fitted with a connection for the spray nozzle.

System components

System type	Isolating valve	Y-Type strainer	Pump	Spray nozzle
RFS1	M10 1" BSP	Fig 12 1" BSP	RP1 1" BSP 240 V 50 Hz	1" BSP male taper
RFS2	M10 1¼" BSP	Fig 12 1¼" BSP	RP2 1¼" BSP 240 V 50 Hz	1" BSP male taper

Materials

No.	Part	Material
1	Isolating valve	Carbon steel with stainless steel internals
2	Y-type strainer	SG iron with stainless steel screen
3	Electric pump	Cast iron with stainless steel internals
4	Spray nozzle	Stainless steel

Limiting conditions

The system is designed for pumping water up to 100°C from an atmospherically vented tank. Maximum ambient temperature 80°C.

Selection

A system is selected based on circulating approximately 20% of the feedtank contents.

Gross feedtank contents litre (kg)	Recirculating feedwater spray systems	
	Designation	Speed setting
≤ 3 000	**RFS1**	1
3 000 to 6 000	**RFS1**	2
6 000 to 8 000	**RFS1**	3
8 000 to 10 000	**RFS2**	2
10 000 to 30 000	**RFS2**	3

How to order

Example: 1 off Spirax Sarco RFS1 recirculating feedwater spray system.

Local regulations may restrict the use of this product to below the conditions quoted.
In the interests of development and improvement of the product, we reserve the right to change the specification.

© Copyright 2004

Dimensions / weights (approximate) in mm and kg

M10
For details of the M10 isolating valve refer to separate literature.

Fig 12
For details of Fig 12 Y-type strainer refer to separate literature.

Spray nozzle
A specially designed stainless steel nozzle for distributing the recirculated feedwater within the flash condensing deaerator head. Screwed 1" BSP taper male. K_V = 6.65.

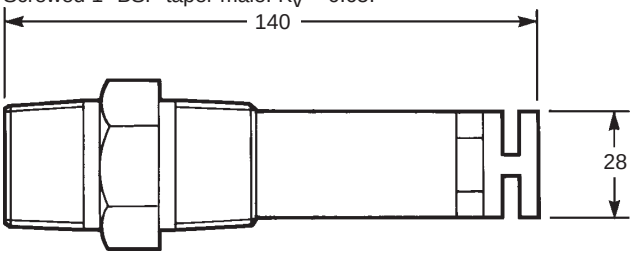

RP type pump
Three speed induction rotor.
BSP union suction and discharge connections.
Single phase 240 V, 50 Hz.

System pump type	Connection	Input power watts	Weight kg
RP1	1" BSP Union	40 to 100	2.5
RP2	1¼" BSP Union	85 to 100	2.5

RP1 type pump

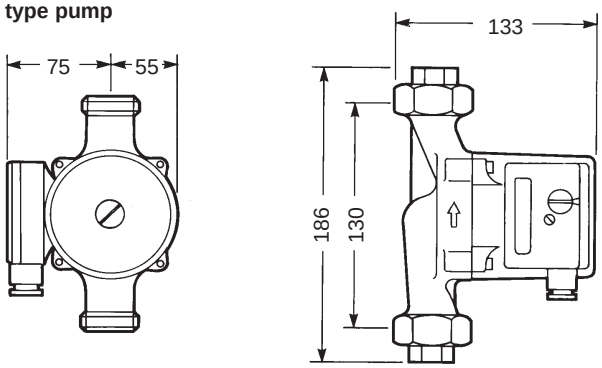

RP2 type pump

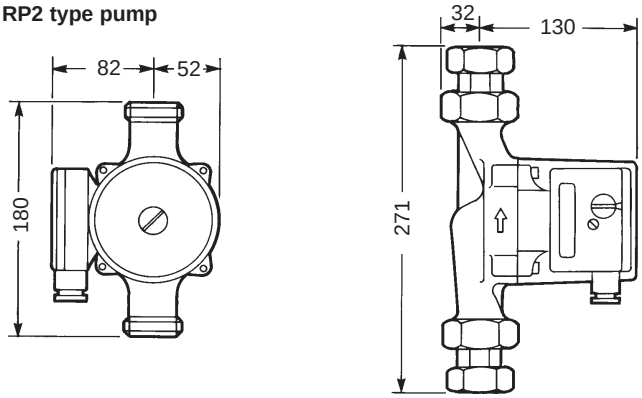

Installation
For new applications
For new applications a specific connection should be incorporated into the feedtank design. This connection should be the same nominal size as the pump and should be positioned as near as possible to the bottom of the tank. The suction side isolating valve, strainer and pump should be positioned as near to the tank as possible whilst allowing access for operating the ball valve and removing the strainer screen. The discharge side pipework should be as short in length as possible. On RFS2 systems the discharge pipework should be reduced to 1" at the spray nozzle.
The pump must be wired in accordance with The Electricity at Work Regulations, that is, using a direct on-line (DOL) starter fitted with a thermal overload plus local isolator.

For retrofit applications
Where no suitable spare connection is available it is recommended that the drain connection be utilised by fitting a 'T' piece as follows. It should be noted that the tank does not need to be drained to fit these pieces.

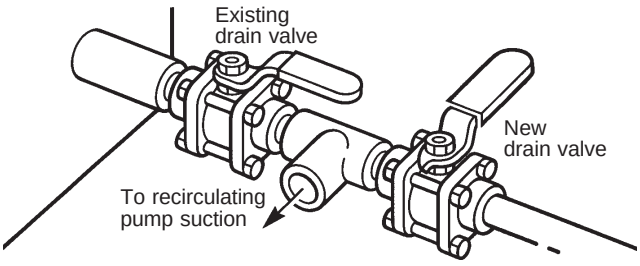

Caution
For all applications the pump shaft must be horizontal, or slightly higher at the vent plug end to prevent premature wearing of the top bearing and shaft.

Operation
The pump should run continuously when the boiler(s) is on load. Water should flow through the pump at all times while the pump is running.

Maintenance
At convenient regular intervals it is recommended that the strainer screen is inspected and any debris removed.