4024151/7

IM-P402-80
AB Issue 7

spirax sarco

LP31
Level Probe
Installation and Maintenance Instructions

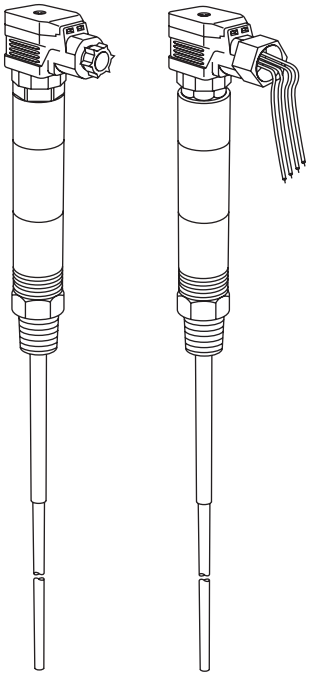

1. Safety information

Safe operation of these products can only be guaranteed if they are properly installed, commissioned, used and maintained by qualified personnel (see Section 1.11) in compliance with the operating instructions. General installation and safety instructions for pipeline and plant construction, as well as the proper use of tools and safety equipment must also be complied with.

The boiler must be depressurised and vented to atmosphere before installation of the probe.

Wherever possible the boiler manufacturer should be consulted for advice on the working and alarm water levels.

Under certain circumstances the water level in a boiler can be different to that shown in the gauge glass.

Separate literature is available from Spirax Sarco on this subject.

Do not install the probe outdoors without additional weather protection.

Drain / vent holes must be kept clean - do not cover.

1.1 Intended use

Referring to the Installation and Maintenance Instructions, name-plate and Technical Information Sheet, check that the product is suitable for the intended use / application. The LP31 level probe and LC3050 level controller comply with the requirements of the European Pressure Equipment Directive 97 / 23 / EC and carry the CE mark. They are classed as Safety Accessories and therefore fall within Category 4 of the Directive.

i) The products have been specifically designed for use on steam and water, which are in Group 2 of the above mentioned Pressure Equipment Directive. The products' use on other fluids may be possible but, if this is contemplated, Spirax Sarco should be contacted to confirm the suitability of the product for the application being considered.

ii) Check material suitability, pressure and temperature and their maximum and minimum values. If the maximum operating limits of the product are lower than those of the system in which it is being fitted, or if malfunction of the product could result in a dangerous overpressure or overtemperature occurrence, ensure a safety device is included in the system to prevent such over-limit situations.

iii) Determine the correct installation situation and direction of fluid flow.

iv) Spirax Sarco products are not intended to withstand external stresses that may be induced by any system to which they are fitted. It is the responsibility of the installer to consider these stresses and take adequate precautions to minimise them.

v) Remove protection covers from all connections and protective film from all name-plates, where appropriate, before installation on steam or other high temperature applications.

1.2 Access

Ensure safe access and if necessary a safe working platform (suitably guarded) before attempting to work on the product. Arrange suitable lifting gear if required.

1.3 Lighting

Ensure adequate lighting, particularly where detailed or intricate work is required.

1.4 Hazardous liquids or gases in the pipeline

Consider what is in the pipeline or what may have been in the pipeline at some previous time. Consider: flammable materials, substances hazardous to health, extremes of temperature.

1.5 Hazardous environment around the product

Consider: explosion risk areas, lack of oxygen (e.g. tanks, pits), dangerous gases, extremes of temperature, hot surfaces, fire hazard (e.g. during welding), excessive noise, moving machinery.

1.6 The system

Consider the effect on the complete system of the work proposed. Will any proposed action (e.g. closing isolation valves, electrical isolation) put any other part of the system or any personnel at risk?
Dangers might include isolation of vents or protective devices or the rendering ineffective of controls or alarms. Ensure isolation valves are turned on and off in a gradual way to avoid system shocks.

1.7 Pressure systems

Ensure that any pressure is isolated and safely vented to atmospheric pressure. Consider double isolation (double block and bleed) and the locking or labelling of closed valves. Do not assume that the system has depressurised even when the pressure gauge indicates zero.

1.8 Temperature

Allow time for temperature to normalise after isolation to avoid danger of burns.

If parts made from the PTFE have been subjected to a temperature approaching 260°C (500°F) or higher, they will give off toxic fumes, which if inhaled are likely to cause temporary discomfort. It is essential for a no smoking rule to be enforced in all areas where PTFE is stored, handled, or processed as persons inhaling the fumes from burning tobacco contaminated with PTFE particles can develop 'polymer fume fever'.

1.9 Tools and consumables

Before starting work ensure that you have suitable tools and/or consumables available. Use only genuine Spirax Sarco replacement parts.

1.10 Protective clothing

Consider whether you and/or others in the vicinity require any protective clothing to protect against the hazards of, for example, chemicals, high/low temperature, radiation, noise, falling objects, and dangers to eyes and face.

1.11 Permits to work

All work must be carried out or be supervised by a suitably competent person. Installation and operating personnel should be trained in the correct use of the product according to the Installation and Maintenance Instructions.
Where a formal 'permit to work' system is in force it must be complied with. Where there is no such system, it is recommended that a responsible person should know what work is going on and, where necessary, arrange to have an assistant whose primary responsibility is safety.
Post 'warning notices' if necessary.

1.12 Handling

Manual handling of large and/or heavy products may present a risk of injury. Lifting, pushing, pulling, carrying or supporting a load by bodily force can cause injury particularly to the back. You are advised to assess the risks taking into account the task, the individual, the load and the working environment and use the appropriate handling method depending on the circumstances of the work being done.

1.13 Residual hazards

In normal use the external surface of the product may be very hot. If used at the maximum permitted operating conditions the surface temperature of some products may reach temperatures of 350°C (662°F).

Many products are not self-draining. Take due care when dismantling or removing the product from an installation (refer to 'Maintenance instructions').

1.14 Freezing

Provision must be made to protect products which are not self-draining against frost damage in environments where they may be exposed to temperatures below freezing point.

1.15 Disposal

Unless otherwise stated in the Installation and Maintenance Instructions, this product is recyclable and no ecological hazard is anticipated with its disposal providing due care is taken, except:

PTFE:

- **Can only be disposed of by approved methods, not incineration.**
- **Keep PTFE waste in a separate container do not mix it with other rubbish, and consign it to a landfill site.**

1.16 Returning products

Customers and stockists are reminded that under EC Health, Safety and Environment Law, when returning products to Spirax Sarco they must provide information on any hazards and the precautions to be taken due to contamination residues or mechanical damage which may present a health, safety or environmental risk. This information must be provided in writing including Health and Safety data sheets relating to any substances identified as hazardous or potentially hazardous.

2. General product information

2.1 General description

The Spirax Sarco LP31 is designed for use with an LC3000 or LC3050 controller to provide a high-integrity, self-monitoring alarm for high water levels in steam boilers and other vessels. The probe is supplied in three nominal tip lengths, and is cut to the exact length required prior to installation.
The standard LP31 (non-UL listed version) can also be used as a simple (non self-monitoring) high or low level probe with a suitable controller.

2.2 Available tip lengths mm (in)

500 (19.7), 1000 (39.4) and 1500 (59).

2.3 Limiting conditions

Maximum boiler pressure	32 bar g	(464 psi g)
Maximum temperature	239°C	(462°F)
Maximum ambient temperature	70°C	(158°F)
Maximum probe cable length	50 metres	(164 ft)
Cable socket protection rating	IP65	

2.4 How the LP31 works

2.4.1 LP31 used as a high water alarm with either an LC3000 or LC3050 controller:

In normal operation as a high level alarm probe:

- The tip is above the water level.
- There is a high resistance path to earth.

If the water level rises to touch the probe tip:

- The resistance path to earth becomes low.
- The alarm relays in the controller are de-energised.
- The high alarm sounds.

The integrity of the LP31 and its wiring are monitored by the LC3000 controller, and an alarm is signalled if a fault occurs.

2.4.2 LP31 used as a low or high water alarm with either an LC1000, LC1300 or LC1350 controller:

The LP31 works in the same way, (low resistance in water, high resistance out of water), **but its integrity is not monitored.**

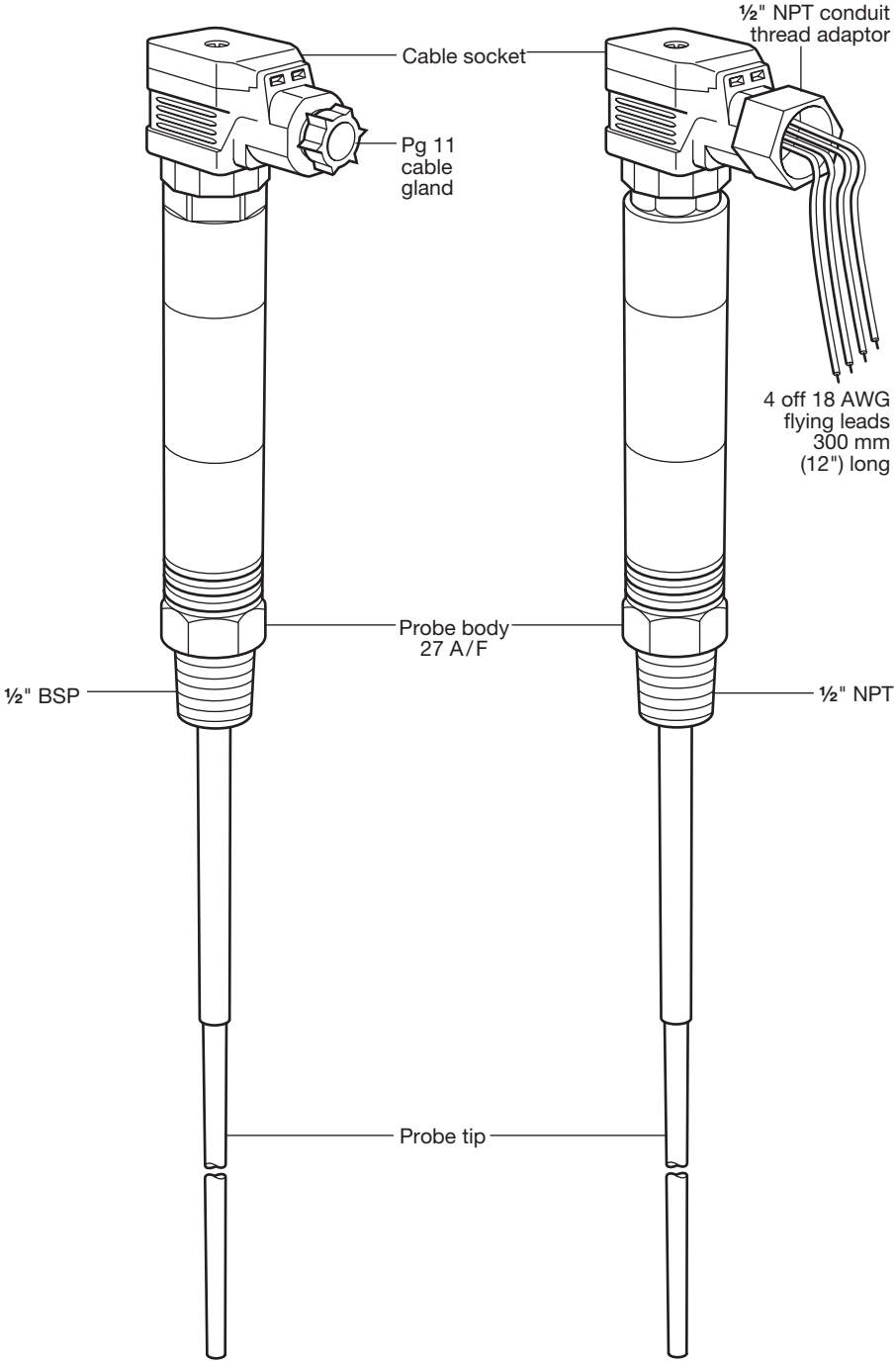

Fig. 1
LP31 Standard version

Fig. 2
LP31 UL version

3. Installation

Before proceeding with any installation or maintenance read Section 1, 'General safety information'.

The probe is normally installed directly in the boiler shell, in a protection tube of at least 80 mm (3") diameter, but can be mounted in an external chamber if regulations permit. The switching level is at the extreme end of the tip.
A DIN 43650 cable socket is supplied with each unit and is provided with a Pg 11 cable gland, or, for the UL version, a ½" NPT conduit thread adaptor with four flying leads.
In most shell boilers the water will 'swell' when it is firing, such that the actual water level will be higher than the level shown in the gauge glass. In practice this can be up to 50 mm (2") in very large boilers, reducing to about 10 mm (⅜") in smaller ones. This difference in levels needs to be taken into consideration when cutting the probe tip to length.
When the probe is to be installed in the boiler, ensure it is positioned at least 1 metre (39") from any safety valve or steam take-off, as increased localised water levels may occur.

3.1 Procedure

3.1.1 Caution:

It is essential that the PTFE probe tip sleeving is not damaged during probe tip cutting.

- Ensure the water is at the required alarm level, including any increase in level due to 'swelling'.
- Mark a metal rod with a water soluble felt pen, and dip the boiler to find the depth from the top of the probe mounting flange to the water level. Alternatively, obtain this depth by transferring the level from the gauge glass.
- Measuring from the underside of the probe body, cut the probe tip to 15 mm (½") less than the dipped length with a fine hacksaw and de-burr the end. See fig. 3. This takes the thread engagement into account.

Note: The minimum sleeved probe length is 30 mm (1⅛"), and the minimum exposed tip length 40 mm (1½"). Install the probe in a ½" BSP (standard version) or ½" NPT (UL version) female connection.

3.1.2 Install the probe as follows:

- Ensure both male and female threads are in good condition.
- Use up to three turns (no more) of PTFE thread sealing tape on the probe thread.
  WARNINGS: Do not use excessive tape. Do not use paste type jointing compound.
- Fit and tighten the probe by hand initially - use a suitable spanner to tighten the probe. Under no circumstances use a pipe wrench.
- Due to the nature of a taper/parallel joint it is not possible to recommend tightening torque figures.
- Do not overtighten - there should always be visible thread on the probe.
- **Note:** The probe thread will not 'bottom out' (i.e. probe body hexagon contacts the face of the female screwed connection), unless there is excessive wear or an out-of-tolerance female thread, in which case it will be necessary to replace or re-work the flange or connection.

3.1.3 Subsequent removal and refitting:

WARNING: Ensure boiler or vessel is de-pressurised and vented to atmosphere before attempting to unscrew or remove the probe.

- Always use the correct size spanner - not a pipe wrench.
- Inspect male and female threads for signs of damage, which may have occurred through overtightening, leading to torn threads or even localised cold welding (galling/picking up).
- If damage has occurred replace the probe.

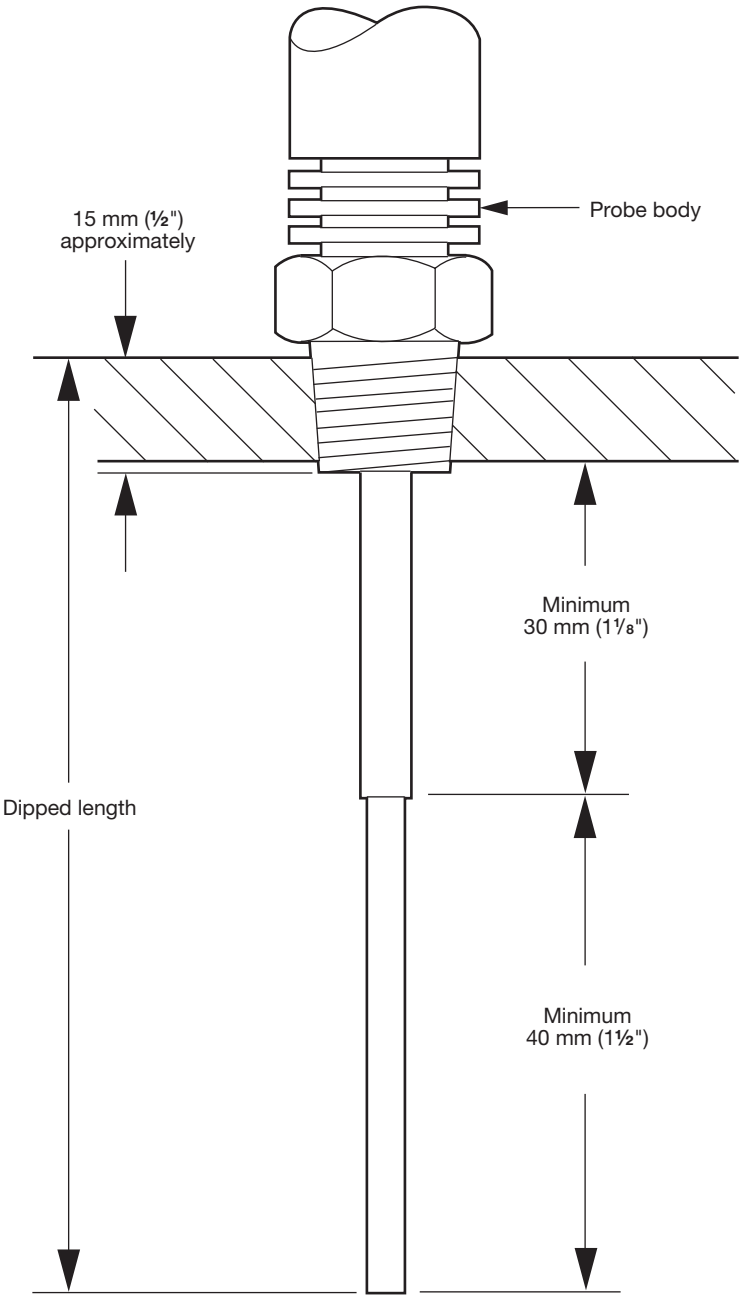

Fig. 3 Installation

4. Wiring

Refer to the relevant controller documentation/wiring diagram for full details.
Cabling should be installed in accordance with BS 6739 - Instrumentation in Process Control Systems: Installation design and practice or local equivalent. For the US and Canadian installations the probe must be wired in accordance with the National and Local Electrical Code (NEC) or the Canadian Electrical Code (CEC).
Wiring should be carried out using 2 or 4 core, 1 mm² (18-16 AWG), high temperature screened cable, with a maximum length of 50 metres (165 ft). Pirelli FP 200 or Delta Crompton Firetuf OHLS are two suitable types for the standard LP31. For the UL version NEC Class I screened cable with a suitable temperature rating (75°C/167°F minimum) must be used to connect the terminal box to the controller.
Ensure that sufficient cable length is provided to allow removal of the cable socket and to ensure that no strain is placed on the unit.
To unplug the cable socket, remove the central screw.
Note: To provide environmental protection the probe is supplied with a gasket between the cable socket and the probe connector. To maintain environmental integrity, ensure gasket is always present when reconnecting cable socket and all contact surfaces are clean and undamaged.
To gain access to the connector block within the cable socket, remove the central screw and withdraw the hinged cover.
The connector block on the standard LP31 maybe rotated in 90° steps to facilitate wiring:
- Remove the retaining screw and withdraw the socket.
- Remove connector block and reposition as required.

It is not possible to rotate the connector block on the UL version.

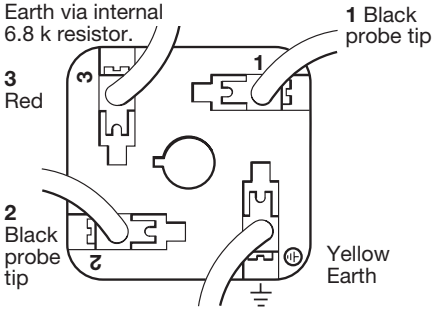

Fig. 4 Connector block removed from cable connector. Wired for use with an LC3000 controller as a high integrity, self-monitoring high level probe.

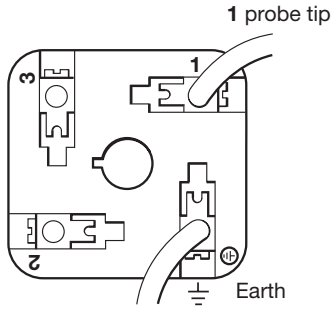

Fig. 5 Connector block removed from cable connector. Wired for use as a simple (non-self-monitoring) high or low level probe.

4.1 Additional wiring information - UL version

The socket is supplied with four 18 AWG, 300 mm (12") long colour coded flying leads. These are to be cut to length and connected to a suitable metal terminal box. A length of flexible UL listed metal conduit is required between the probe and terminal box to provide environmental protection and easy electrical connection. The cable socket is provided with a ½" NPT conduit adaptor for this purpose.

WARNING:
The flying leads supplied with the probe are rated to 221°F (105°C). This temperature rating must not be exceeded.
The flexible conduit and terminal box are not to incorporate any other control wiring as this may damage or reduce the performance of the product.
It is not possible to rotate the cable socket in 90° steps, as with the non-listed LP31.
To do so may damage the internal wiring.
Ensure that any condensation which might build up in the conduit network is prevented from accumulating in the probe cable connector and terminal box.

LC3000 controller

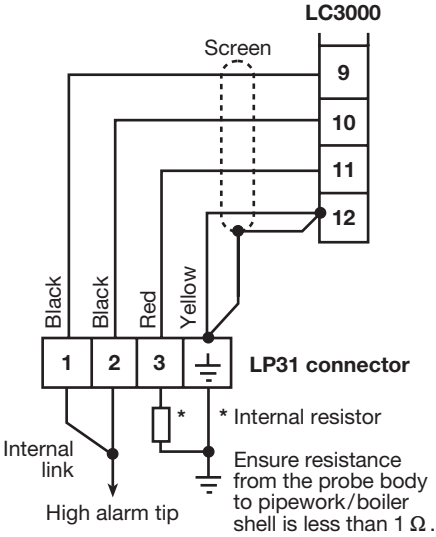

Fig. 6
Standard version

LC3050 controller

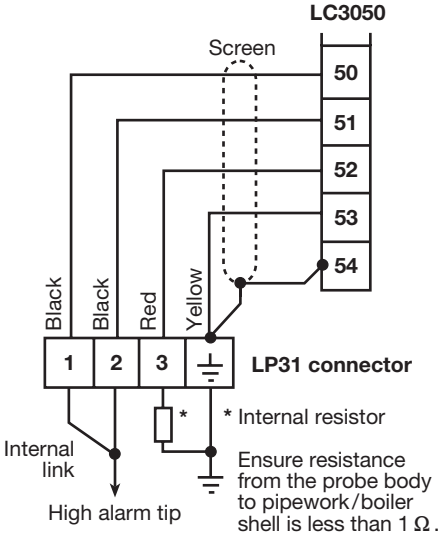

Fig. 8
Standard version

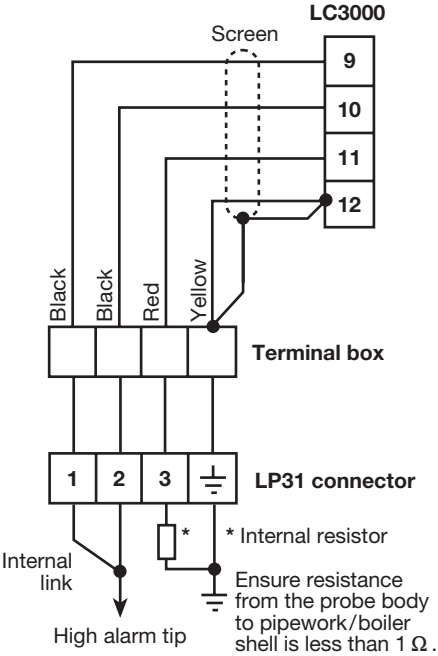

Fig. 7
UL version

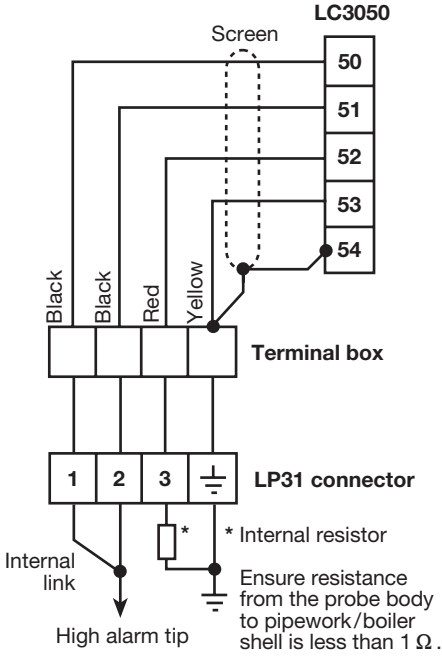

Fig. 9
UL version

5. Maintenance

Probe body cleaning instructions - Use a cloth dampened with tap / de-ionised water or isopropyl alcohol. Use of other cleaning materials could damage the product and invalidate the warranty.

Frequent maintenance of the probe should not be necessary. However steam boiler water level controls do require regular testing in accordance with National and Regional regulations, and in the UK, Guidance Notes published by the Health and Safety Executive.
The UK Health and Safety Executive recommends that boiler controls should be inspected at least at quarterly intervals. We recommend that this frequency is also followed outside the UK unless National or Regional regulations state otherwise.
Where regular tests are carried out properly in a well run boiler house with good water treatment, it may be that only an annual inspection of the probe is required.
This is a matter, however, for the user to decide in liaison with the boiler inspector in order to determine a sensible inspection programme to suit the individual boiler plant.

We recommend that the inspection is carried out as follows:

- Depressurise and vent boiler/vessel, - observe safety precautions.
- Disconnect the electrical supply to controller.
- Remove probe upper housing and inspect for dirt or moisture.
- Disconnect wiring and remove probe.
- Clean housing if necessary.
- Check condition of probe.
- Clean probe tips and insulation if necessary with a cloth or soft bristle brush - **do not** use abrasive or conductive products such as steel wool.

  WARNING
  If scale is present on the probe, it will also be forming on the boiler, and a competent water treatment specialist must be consulted as soon as possible.
- Check that all extension connector lock-nuts are tight.
- Inspect the probe controller wiring, and the controller supply wiring.
- Check the controller for damage.
- Reassemble and carry out a full functional check of the equipment.

For specific testing instruction for Spirax Sarco systems please see separate literature.