Cert. No. LRQ 0963008

ISO 9001

spirax sarco

TI-P333-09
MI Issue 4

M322
Flowmeter Conditioning Unit

Description

The M322 flowmeter conditioning unit accepts temperature and flow signals from the M111 transducer as well as an analogue (4 - 20 mA) pressure signal from an EL2600 pressure transmitter. Where the Spiraflo system is used for heat metering on saturated steam/ condensate systems a separate temperature transmitter is used to monitor the condensate return temperature. These signals are converted into digital form for transmission over longer lengths - to a maximum of 300 m.

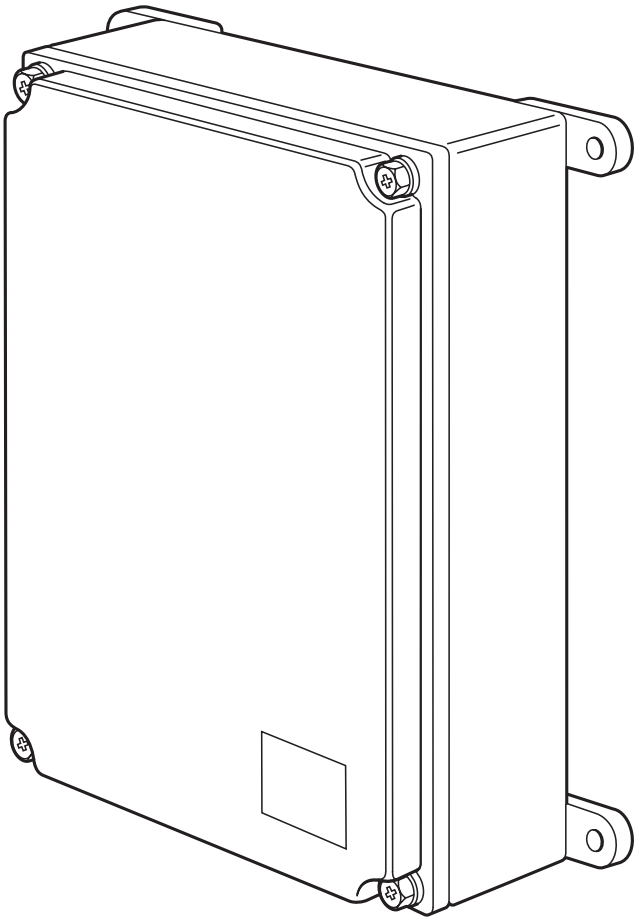

Materials

Enclosure	Polycarbonate
Enclosure rating	IP44 (with correct cable glands)

Technical

The M322 flowmeter conditioning unit is designed to operate in conjunction with the M111 transducer and the M800 flow computer. The supply voltage (24 Vdc) is sourced from the flow computer so no extra connections to a mains supply are necessary.

Channel	Input	Output
Port 1 (Flow)	Analogue input from M111 transducer proportional to plate deflection angle (using RVDT). i.e. flow	Frequency signal (150 - 1500 Hz) which is proportional to flow through the M111 transducer
Port 2 (Temperature)	Analogue input from Pt100 temperature sensor incorporated into M111 transducer	Frequency signal (150 - 1500 Hz) which is proportional to measured temperature
Port 3 (Pressure or temperature in heat metering applications)	4 - 20 mA from EL2600 series pressure transmitter Maximum loop impedance = 150 ohms Open circuit voltage = 15 volts	Frequency signal (150 - 1500 Hz) which is proportional to measured pressure

Safety information, installation and maintenance

For full details see the Installation and Maintenance Instructions supplied with the product.
Note: To comply with the 'Electromagnetic Compatibility Directive', an EMC gland is required to connect the cable screen to the conductive interior surface of the M322. A suitable gland is available from gland manufacturers.

Maintenance note:
The M322 flowmeter conditioning unit is calibrated and non-repairable.

Installation note:
The M322 flowmeter conditioning unit is designed to be wall mounted using the four mounting lugs supplied with the unit. It should be located within 2 m of the M111 transducer and connected to it using the cable supplied with the transducer.
Recommended wiring from the EL2600 pressure transmitter to the flowmeter conditioning unit is 7 x 0.2 mm twin core wire, either twisted or screened. When using screened cable, the screen should be connected to the earth tag in the EL2600. This wiring to be supplied by the customer.
The flowmeter conditioning unit should be fitted away from direct sources of heat.
Maximum ambient temperature is 65°C, minimum 0°C.

Note - For saturated steam applications, no pressure transmitter is required. Density compensation is performed using the input from the temperature sensor that is incorporated in the body of the M111 transducer.
For superheated steam applications where full density compensation is required, a pressure transmitter (Spirax Sarco EL2600 series) is required and should be fitted in the line upstream of the M111 transducer as described in the instructions that accompany the equipment.
For superheated steam applications where the line pressure is constant and only the temperature varies, no pressure transmitter is required.
Density correction is carried out assuming a constant nominal pressure.

Local regulations may restrict the use of this product to below the conditions quoted.
In the interests of development and improvement of the product, we reserve the right to change the specification without notice.

Dimensions/weight (approximate) in mm and kg

A	B	C	D	E	F	G	H	I	Weight
250	175	75	198	232	27	40	85	130	0.78

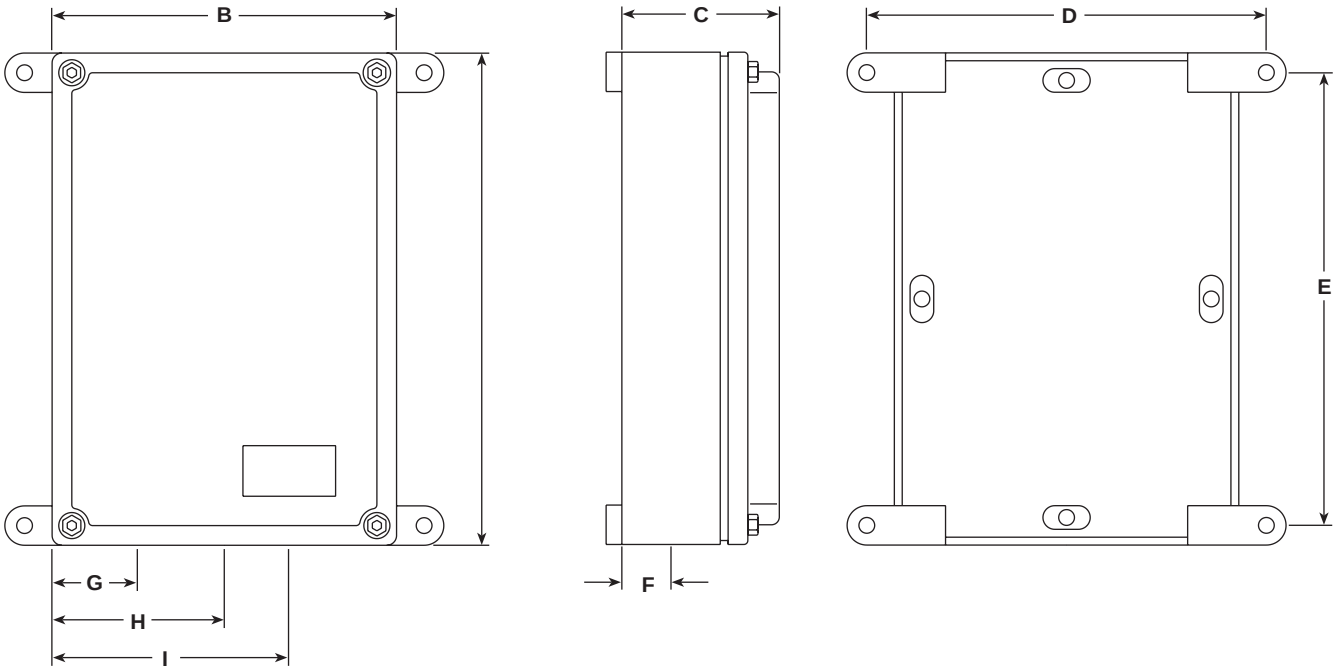

How to order

Example: 1 - Spirax Sarco M322 flowmeter conditioning unit.

Associated equipment

M111	Transducer	TI-P330-03
M800	Flow computer	
EL2600	Pressure transmitter	TI-P322-02

For a general description of the Spirax Sarco steam flowmeter, see TI-P330-02.