IM-P343-22
CH Issue 3

spirax sarco

SP2
Options
Installation and Maintenance Instructions

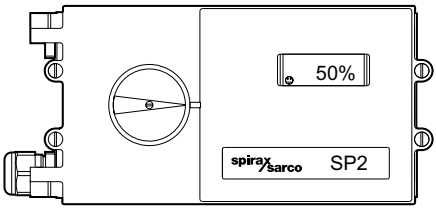

1. *General safety information*

2. *Options*

3. *Electrical connections*

4. *Programming and commissioning travel switches*

5. *Fitting a filter plug kit*

spirax sarco

© Copyright 2003

1. General safety information

Your attention is drawn to Safety Information Leaflet IM-GCM-10, as well as to any National or Regional regulations.

1.1 Electrical safety requirements

The SP2 is a class III product which must only be powered from Safe Extra Low Voltage (SELV) sources whether by virtue of a 4 - 20 mA control signal or from a separate power supply. Similarly all signal circuits connected to an options board must operate within the confines of SELV systems. All associated wiring must be separated from other wiring containing hazardous voltages.

1.2 Electromagnetic compatibility

The product complies with the Electromagnetic Compatibility Directive 89/336 EEC by meeting standards EN 5008-1 (Emissions) and EN 50082-2 (Industrial Immunity). This product may be affected by interference above the limits within EN 50082-2 if:

- **The product or its wiring is located near a radio transmitter. The actual separation necessary will vary according to the power of the transmitter.**
- **Cellular telephones or mobile radios are used within approximately one metre of the product or its wiring.**
- **The wiring is routed alongside power cables subject to high voltage transients or current surges.**

2.1 Available options

2.1.1 Software travel switches

Two software configured travel switches supplied on a standard options PCB.
The travel switch 1 (TS1) is normally open and the travel switch 2 (TS2) is normally closed.

2.1.2 Pepperl and Fuchs mechanical travel switches

Two mechanical proximity travel switches plus standard options PCB board.

2.1.3 4 - 20 mA retransmit

4 - 20 mA retransmission of actual valve position (as measured in autostroke - **AUTOS**) plus standard options board having two software configured travel switches or connections for Pepperl and Fuchs mechanical proximity travel switches.
Note: Options boards are individually electrically isolated and externally powered.

2.2 Fitting the options board

2.2.1 Firstly set the yellow slide switch as follows (refer to Fig. 1):
If the options PCB is used for software configured travel switches, set all elements of the yellow slide switch **SW1** to position '**A**'. Prepare the ribbon cable by ensuring that the connector is at right angles to the options PCB, ready for insertion into the main PCB socket (refer to Fig. 1).

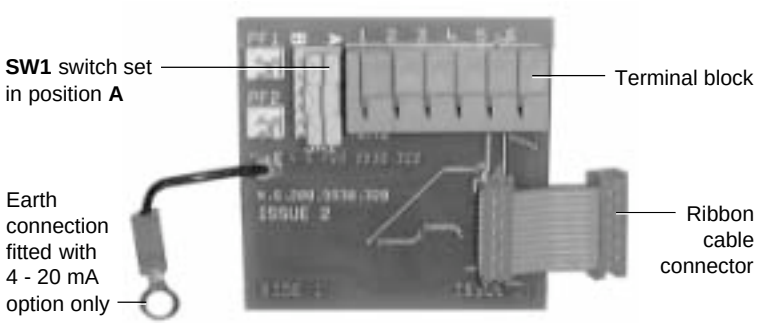

Fig. 1 Options PCB

2.2.2 To gain easy access for fitting the options board remove the indicator disc domed nut, washer and travel indicator disc.

2.2.3 Loosen the two plastic retaining clamps within the SP2 housing (refer to Fig. 2).

Fig. 2

2.2.4 Locate the edge of the options PCB in the two cast-in location lugs at the base of the SP2 case (refer to Fig. 3).

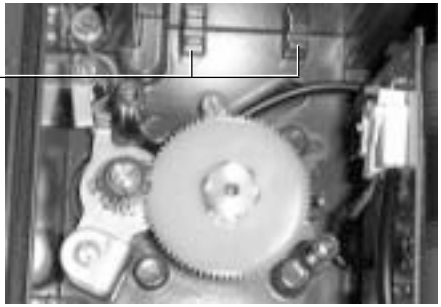

Fig. 3

2.2.5 Push the connector on the ribbon cable into the socket on the main PCB.
Note: this should be done with light finger pressure only, **do not apply force.**

2.2.6 Secure the options PCB in place by locating the two retaining clips and tighten the fixing screws. **Note:** with the retaining clips secured, there will be some float of the PCB (refer to Fig. 4).

Fig. 4

2.2.7 Options boards having 4 - 20 mA retransmit are provided with an earth connection. Using the M4 screw, secure the earth wire to adjacent pillar removing any excess paint that may be present. The same pillar should be used for both the 4 20 mA PCB and Pepperl and Fuchs switch earth connections if necessary.

2.2.8 Make electrical connections to terminals as required. Refer to Section 3 'Electrical connection' for details of wiring connections.

2.2.9 Refit the travel indicator disc, washer and domed nut.

2.3 Fitting Pepperl and Fuchs mechanical proximity switches

2.3.1 Fitting of Pepperl and Fuchs switch assembly. Refer to Fig. 5 for components and Fig. 6 for general assembly.

Fig. 5 Pepperl and Fuchs switch assembly kit components

2.3.2 Prepare the assembly kit by unscrewing the extension spindle (**12**) and remove the two switch vanes (**6**). Remove the spindle (**13**) ensuring that the 'O' ring (**10**) remains in place.

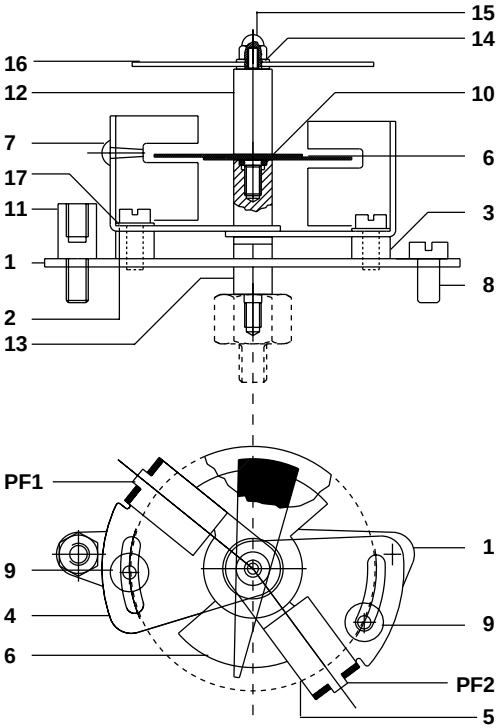

No.	Description	Quantity
1	Support plate	1
2	Spacer	1
3	Spacer	1
4	Adjustment plate	2
5	Switch sensor	2
6	Switch vane	2
7	Fixings	2
8	Screws (M4 x 8)	1
9	Adjustment screw	2
10	'O' ring	1
11	Earth adaptor screw	1
12	Extension spindle	1
13	Spindle	1
14	Washer	2
15	Domed nut	1
16	Indicator disc	1
17	Washer	2

Fig. 6 General assembly

2.3.3 Ensure that the electrical and pneumatic supplies to the positioners are isolated. To fit the Pepperl and Fuchs switches it is recommended that the SP2 positioner is removed from the valve / actuator assembly and fitting is carried out on a clean flat surface.

2.3.4 Prepare the SP2 by removing the indicator disc domed nut, washers, indicator disc and spindle. Remove existing M4 x 8 screw from the SP2 earth pillar.

2.3.5 Screw new spindle (**13**) onto existing central pin (refer to Fig. 7) using a 7 mm spanner.

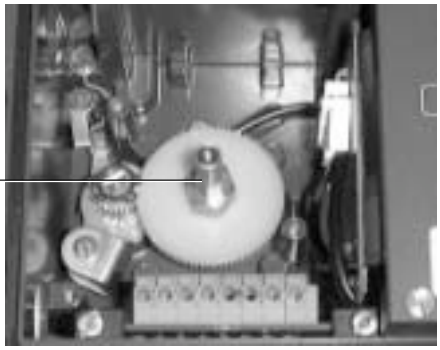

Fig. 7

2.3.6 Fit the Pepperl and Fuchs support plate (**1**) aligning central holes to pass over spindle (**13**). **Note:** the support plate will only locate in one orientation.

2.3.7 Use earth adapter screw (**11**) and M4 x 8 screw (**8**) and tighten to locate the support plate (**1**) (refer to Fig. 8).

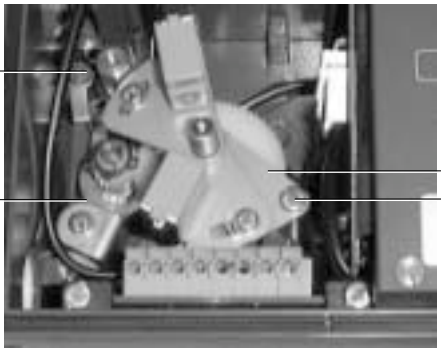

Fig. 8

2.3.8 It is now necessary to fit the options board. Firstly ensure all elements of the yellow changeover switch **SW1** are set at position '**B**'. Prepare the ribbon cable by ensuring that the connector is at right angles to the options PCB, ready for insertion into the main PCB socket, (only required with 4 - 20 mA retransmit option). Plug the Pepperl and Fuchs switch sockets onto the options board connectors. The **PF1** socket should be engaged in the **PF1** connector. The **PF2** socket should be connected to the **PF2** connector (refer to Fig. 9a).

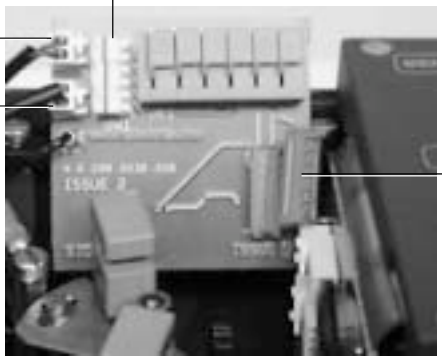

Fig. 9a

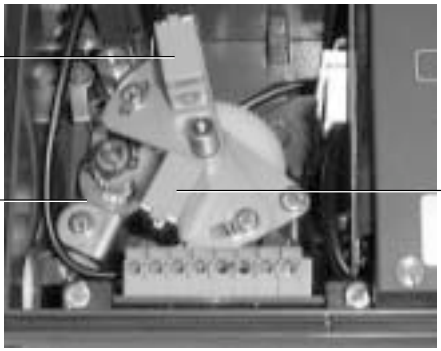

Fig. 9b

2.3.9 Secure the **PF2** switch connector wire behind the potentiometer mounting bracket (refer to Fig. 9b).

2.3.10 Loosen the option board plastic retaining clamps. Now locate the options board within the SP2 enclosure ensuring it is correctly located within the lugs at the bottom of the housing (refer to Fig. 10). **Note:** the options board should be located with terminal connectors at the top.

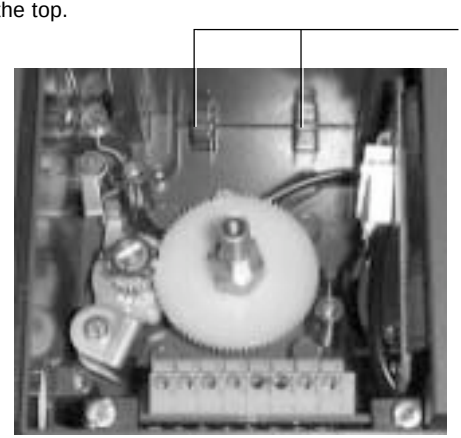

Fig. 10

2.3.11 The earth cable should now be reconnected to the earth adaptor (**11**) and secured using the original M4 x 8 screw (refer to Fig. 11). When correctly located, the plastic retaining clamps can be tightened to secure the options board in place. **Note:** With the retaining clips secured there will be some float of the PCB.

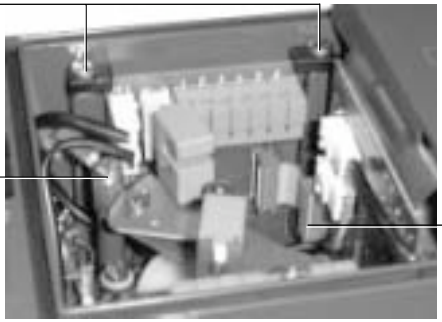

Fig. 11

2.3.12 Prepare the ribbon cable by ensuring it is at right angles to the options PCB. Engage the ribbon connector onto the main PCB socket permanently pushing in place to locate. This should be done with light finger pressure only (refer to Fig. 11) do not apply force, (only required with 4 - 20 mA retransmit and software switch options).

2.3.13 Fit switching vanes (**6**) to the spindle (**13**) and ensure 'O' ring (**10**) is correctly located within the end of the spindle. Now fit the extension spindle (**12**) and finger tighten to secure in position.
It is essential that the switching vanes are correctly located within the slots of the **PF1** and **PF2** switches. The top vane should be positioned within **PF1** switch sensor (**5**) and the bottom vane positioned within the **PF2** switch sensor (**5**) to ensure they are positioned evenly within the slots (refer to Fig. 12).

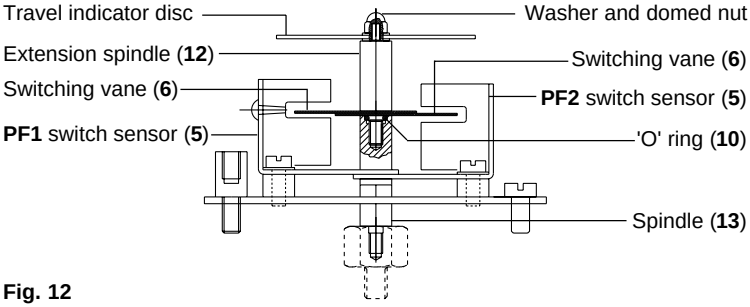

Fig. 12

2.3.14 It is now necessary to set the switching action. Note, adjustment of the switch vanes provides coarse setting whilst movement of the adjustment plates (**4**) provides fine setting.

For setting the Pepperl and Fuchs switches you must now mount the SP2 positioner onto the valve / actuator assembly and recommission the SP2 positioner as described in Section 5, 'Installation' of the SP2 Installation and Maintenance Instructions IM-P343-19.

Please note: if the SP2 positioners are supplied with Pepperl and Fuchs switches already fitted, they will be supplied unset.

2.4 Setting Pepperl and Fuchs switches

Note: The **PF1** or **PF2** switch will open when the switching vane is 50% or more within the switch sensor.

2.4.1 Coarse setting of the PF1 switch

Locate the adjustment plate (**4**) at its mid position and tighten the adjustment screws (**9**) (refer to Fig. 13).
Position the valve at the desired switching position for **PF1** switch. The valve can be positioned using manual control (M-CTL) in conjunction with the digital display of percentage travel, or alternatively using the valve travel indicators located on the actuator pillar / yoke. Coarsely set the switching vane within the **PF1** switch sensor (**5**) at the desired switching position. Fine adjustment will be made later.

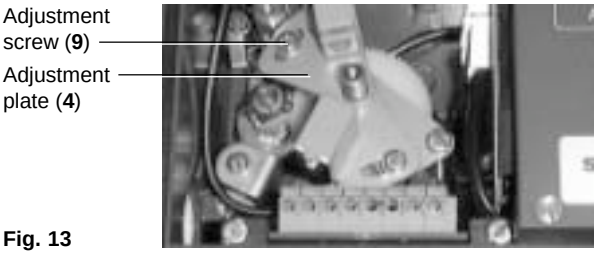

Fig. 13

2.4.2 Coarse setting of the PF2 switch

Position the valve at the desired switching position for **PF2**. Coarsely set the second switching vane within **PF2** switch sensor (**5**) as previously described whilst maintaining the previous setting of the **PF1** switching vane. Tighten the extension spindle (**12**).

2.4.3 Fine adjustment of the PF1 and PF2 switch

To achieve fine adjustment it is necessary to have some form of switching indicator device across terminals **1** and **2** for **PF1** and terminals **3** and **4** for **PF2**. Adjust the valve travel position of **PF1** switch sensor (**5**). If fine adjustment is required it can be achieved by loosening the adjustment screw (**9**) and sliding the adjustment plate (**4**) in either direction to achieve the desired switching position. Tighten the adjustment screw (**9**) to secure the setting. This exercise should be repeated for the **PF2** switch whilst maintaining the previous setting position of switch **PF1** (refer to Fig. 6).

2.4.4 On completion of setting **PF1** and **PF2** switches refit the travel indicator disc, washer and domed nut (refer to Fig. 14).

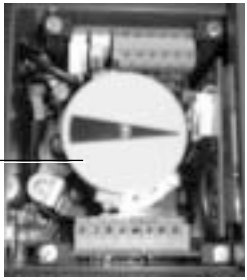

Fig. 14

3.1 Guidance notes on wiring installation

For heavy industrial applications it is recommended to use screened cables or signal cables run in metal conduit. Failure to do so could result in positional errors of up to ±5% in an RF field excess of 10 V/m. If screened cables are used, ensure that the screen is connected to the local earth at one end with a connection resistance of less than1 ohm.

For light industrial applications where RF fields do not exceed 3 V/m unscreened cables may be used.

Cabling should be installed in accordance with BS 6739 - Instrumentation in Process Control Systems: Installation design and practice or local equivalent.

Cable connection blanking plug
(**Note:** a spare Pg 13.5 cable gland is supplied with each options board kit)

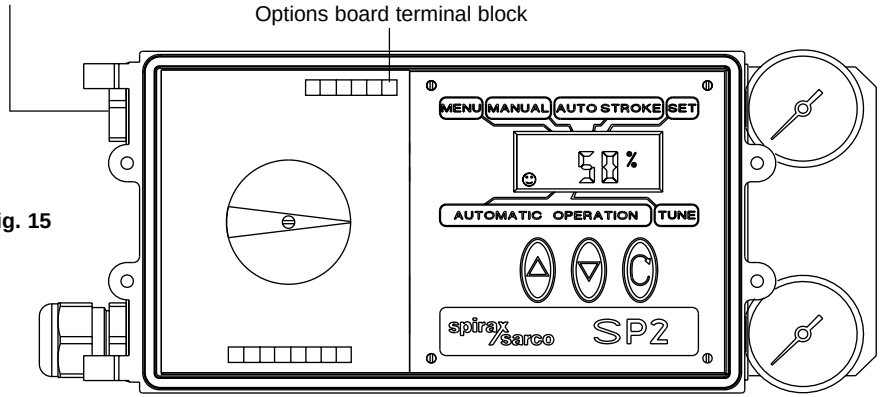

Fig. 15

3.2 Options board wiring diagrams

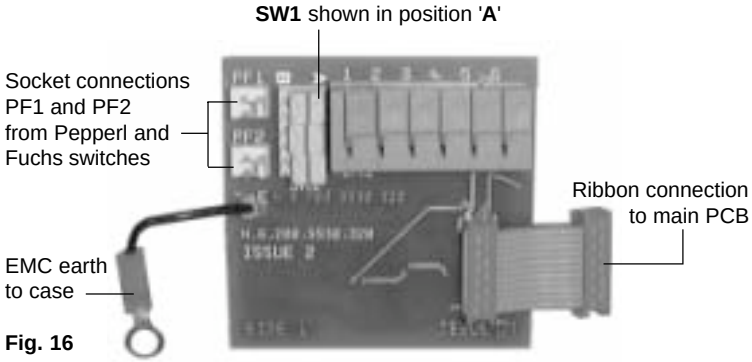

Fig. 16

3.2.1 Options wiring diagrams

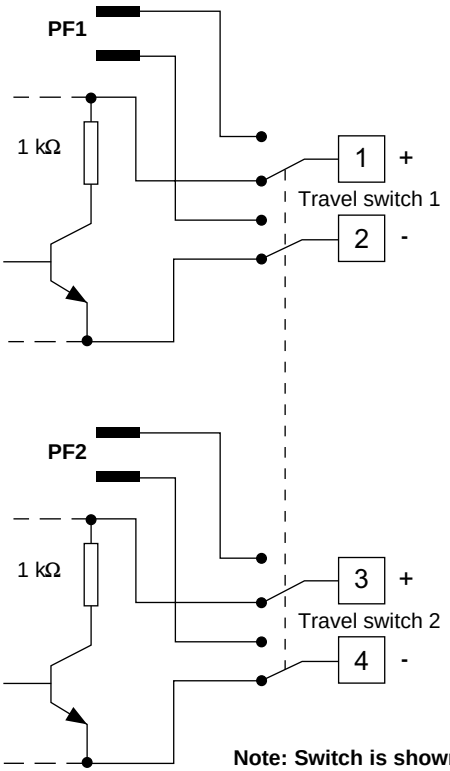

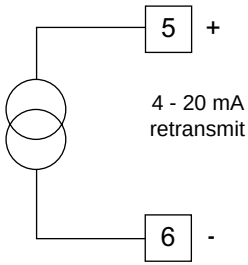

Fig. 18 4 - 20 mA retransmit

Note: Switch is shown in position A

Fig. 17 Software switches

Table 1

Changeover switch SW1	Terminals 1 and 2	Terminals 3 and 4
A	TS1	TS2 (Software travel switches)
B	PF1	PF2 (Pepperl and Fuchs mechanical travel switches)

Table 2 - Software travel switch ratings

Ratings	Supply	Impedance	On current	Off current
TS1 travel switch	18 - 30 Vdc	1 kΩ	10 mA	< 53 µA @ 24 V
TS2 travel switch	18 - 30 Vdc	1 kΩ	10 mA	< 53 µA @ 24 V
4 - 20 mA	8 - 30 Vdc	-	-	-

Isolation between each option and between option boards to main circuit = 50 Vac

Table 3 - Pepperl and Fuchs switch ratings

Switch type	Pepperl and Fuchs SJ3, 5-N
Switch characteristic	NAMUR constant current
Voltage range	5 - 25 Vdc
Nominal voltage	8 Vdc
Current (sensing face covered)	< 1 mA
Current (sensing face free)	> 3 mA

4.1 Advance to TUNE in the SP2 main menu.

Press ↻ key to advance to travel switch 1 (TS1).

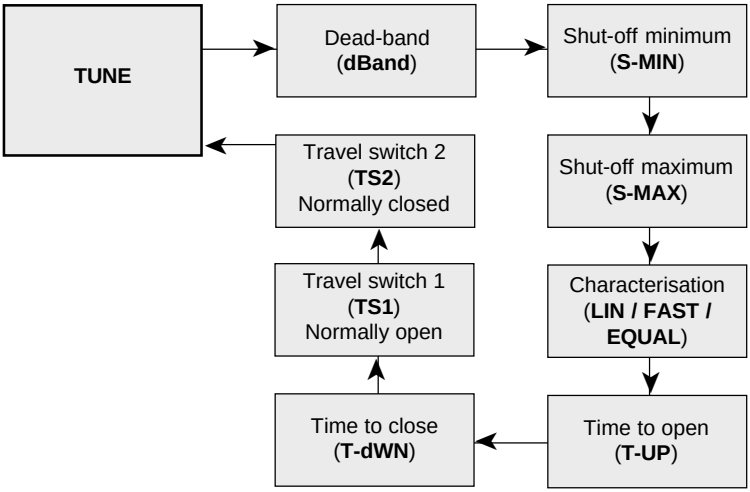

Fig. 19

4.2 TS1 and TS2 software travel switches

Software configured travel switches are optional and provided on a separate plug in PCB board. They will only appear in the programming menu if the options PCB is fitted, and switch **SW1** set to position **A**.
Two switches are available **TS1** and **TS2**.
TS1 is normally open and **TS2 is normally closed**. Switching action is set as a % of valve travel (refer to Figs. 20 and 21).

TS1 - software configured travel switch 1 (normally open)

Programming notes

Software configured travel switches are optional with the SP2 positioner. The switching point can be set as a percentage of the valve travel between 0 to100%. A value can be set outside the limits of the travel settings (**MIN-T**) and (**MAX-T**). Initially **OFF** will be displayed indicating that the switch is not set. To set a switching point press ▲ and ▼ keys to alter the displayed value. Press ↻ key to accept the displayed value and advance to travel switch 2 normally closed (**TS2**).

Commissioning notes

Travel switch 1 (**TS1**) is normally open. External wiring should be made between terminals 1 (**+**) and 2 (**-**). The value set is a % of valve travel. At the set value the switch will close. If the options PCB is fitted and the slide switch **SW1** set to position '**A**' the status of the switch will be shown on the LCD (refer to Fig. 20).
Software configured travel switches can be used to remotely indicate valve position or to operate warning devices, fans, stirrers, motors or other process equipment via a secondary switching device.

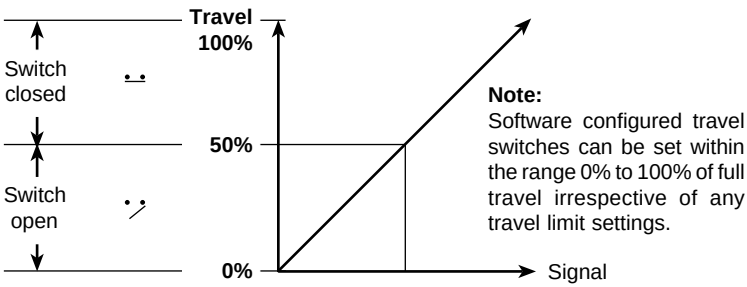

Fig. 20 TS1 Travel switch 1 (normally open)

TS2 - software configured travel switch 2 (normally closed)

Programming notes

Software configured travel switches are optional with the SP2 positioner. The switching point can be set as a percentage of the valve travel between 0 to 100%. A value can be set outside the limits of the travel settings (**MIN-T**) and (**MAX-T**). Initially **OFF** will be displayed indicating that the switch is not set. To set a switching point press ▲ and ▼ keys to alter the displayed value. Press ↺ key to accept the displayed value and return to **TUNE** in the main menu.

Commissioning notes

Travel switch 2 (**TS2**) is normally closed. External wiring should be made between terminals 3 (**+**) and 4 (**-**). The value set is a % of valve travel. At the set value the switch will open.If the options PCB is fitted and the slide switch **SW1** set to position '**A**' the staus of the switch will be shown on the LCD (refer to Fig. 21).

Software configured travel switches can be used to remotely indicate valve position or to operate warning devices, fans, stirrers, motors or other process equipment via a secondary switching device.

Note: If the switch is in its 'off' status it will be an open circuit.

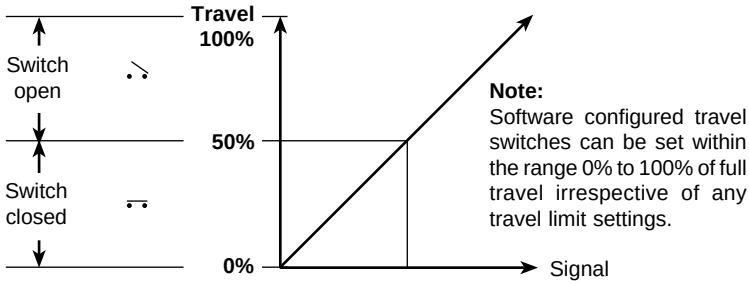

Fig. 21 TS2 Travel switch 2 (normally closed)

To change the filter proceed as follows:

- Ensure that the air supply to the positioner is isolated.
- Unscrew the filter plug (**1**) from the SP2 housing using a 5 mm allen key (refer to Fig. 22).

The replacement filter plug can now be fitted:

- Fit the 'O' ring (**4**) and filter (**3**) onto the filter plug (**1**) (refer to Fig. 23).
- Finally fit the retaining screw (**2**).

The filter plug can now be replaced into the SP2 housing, checking that the 'O' ring (**4**) is correctly located.

The pnuematic air supply can now be restored to the positioner and checks made to ensure that the filter plug 'O' ring has provided the neccesary air tight seal.

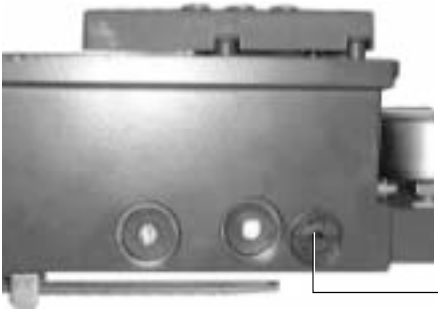

Fig. 22

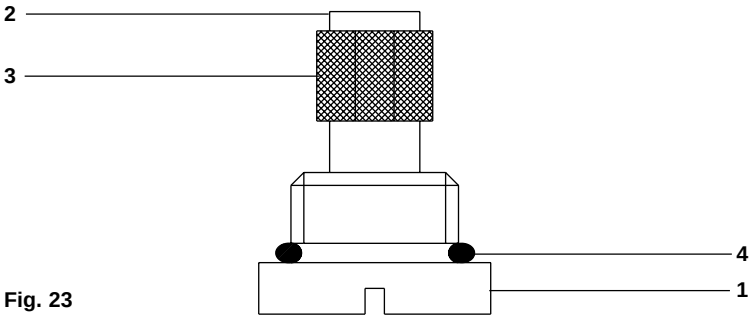

Fig. 23