Cert. No. LRQ 0963008

ISO 9001

spirax sarco

TI-P320-56
CH Issue 3

PN1000 Series Spring Extend Pneumatic Actuators for DN150 and DN200 Stainless Steel KE and KEA Valves

Description

A range of single spring linear actuators having 2 diaphragm sizes for matching the requirements of different valves at various differential pressures. Each actuator is fitted with a combined mechanical stroke indicator and anti-rotation guard. The actuators are designed for easy conversion from spring extend to spring retract, and vice versa, without the need for special tools.

Available types

Spring extend spindle actuators:
PN1500 and **PN1600** series**.**

Technical data

Temperature range	-20°C to +110°C	(-4°F to +230°F)
Maximum operating pressure	4.5 bar	(65 psi)
Air supply connection	PN1500 and PN1600 ¼" NPT	

Materials

No.	Part	Material
1	Diaphragm housing	Carbon steel
2	Diaphragm	Reinforced nitrile rubber
3	Diaphragm plate	Stainless steel
4	Spring	Spring steel
5	Spindle guide	Bronze
6	DU bearing	Hardened steel
7	Yoke	Cast steel
8	Housing securing nuts and bolts	Zinc plated steel
9	Spindle	Stainless steel
10	Connector	Zinc plated steel
11	Travel indicator	Stainless steel
12	Lock plate	Zinc plated steel
13	'O' ring	Nitrile rubber
14	Lock-nut	Zinc plated steel
15	Cap with vent hole	Nickel plated brass
16	Spring location washer	Zinc plated steel
17	Valve spindle adapter	Stainless steel

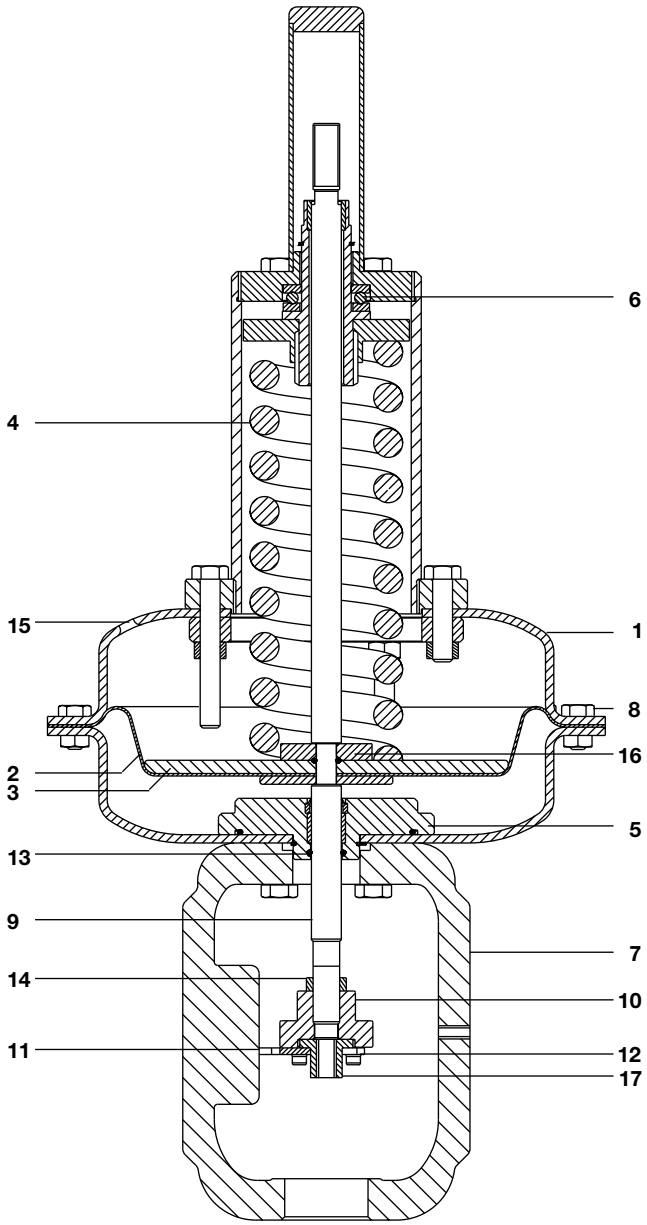

Local regulations may restrict the use of this product to below the conditions quoted.
In the interests of development and improvement of the product, we reserve the right to change the specification without notice.

© Copyright 2010

Differential pressures for KE and KEA series valves and PN1000 series actuators (spring extend)

Note: The differential pressures stated in the tables below are limited by the maximum operating pressures of the selected control valve.

In certain circumstances with a reduced K_{VS} value, or where reduced valve stroke is acceptable, it may be possible to increase the maximum differential pressure above that shown in the table by special setting of the actuator. Please consult Spirax Sarco.

KE and KEA valve size	**DN150**				**DN200**			
Travel mm	50	50	30	30	50	50	50	30
Valve seat sizes	Full K_{VS}	Reduced K_{VS}			Full K_{VS}	Reduced K_{VS}		
		No 1	No 2	No 3		No 1	No 2	No 3

Differential pressures shown apply to valves with standard PTFE stem seals or bellows sealed stems with either metal-to-metal or PTFE soft seat.

Actuator model	**Travel**	**Spring range**	**Spring setting**	**Positioner required**	**Maximum differential pressure (bar)**							
PN1553B4	50 mm	2.0 - 4.0	2.0 - 4.0	Yes	6.4	9.5	15.4	24.7	3.4	6.4	9.5	15.4
	30 mm	2.0 - 4.0	2.8 - 4.0	Yes	-	-	22.6	35.9	-	-	-	22.6
PN1653B4	50 mm	2.0 - 4.0	2.0 - 4.0	Yes	9.8	14.4	23.0	36.7	5.2	9.8	14.4	23.0
	30 mm	2.0 - 4.0	2.8 - 4.0	Yes	-	-	33.3	50.0	-	-	-	33.3

Differential pressures shown below apply to valves with high temperature graphite (H) stem seals and metal-to-metal seats.

Actuator model	**Travel**	**Spring range**	**Spring setting**	**Positioner required**	**Maximum differential pressure (bar)**							
PN1553B4	50 mm	2.0 - 4.0	2.0 - 4.0	Yes	6.3	9.5	15.3	24.6	3.3	6.3	9.5	15.3
	30 mm	2.0 - 4.0	2.8 - 4.0	Yes	-	-	22.4	35.7	-	-	-	22.4
PN1653B4	50 mm	2.0 - 4.0	2.0 - 4.0	Yes	9.7	14.4	23.0	36.5	5.2	9.7	14.3	23.0
	30 mm	2.0 - 4.0	2.8 - 4.0	Yes	-	-	33.1	50.0	-	-	-	33.1

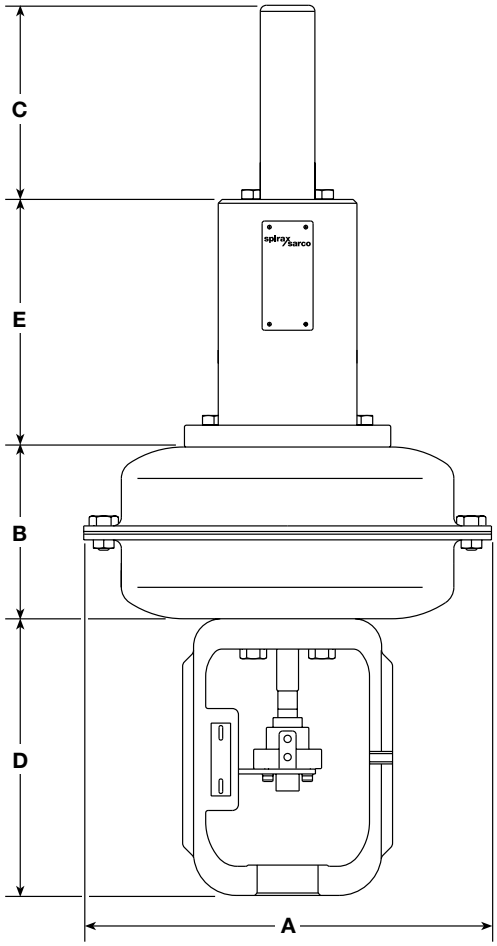

Installation

Actuators should be mounted on the valve with the stem in a vertical position. Installation and Maintenance Instructions are supplied with the product.

Spare parts

Information regarding available spare parts is given on TI-P320-54.

PN1000 series actuator selection table

Selection should be made in conjunction with the differential pressure chart shown above and the following code:

Actuation	PN = Pneumatic	PN
Actuator action	1 = Spring to extend	1
Diaphragm size	5 = 400 cm² 6 = 500 cm²	5
Actuator travel	5 = 50 mm (2")	5
Spring range	3 = 2.0 to 4.0 bar (30 to 60 psi)	3
Yoke type	B = Type B for valve sizes: DN150 - 200 (6" to 8")	B
Spring-holder size	4 = Type 4	4

PN	1	5	5	3	B	4

How to order

Example: 1 off Spirax Sarco PN1553B4 actuator, set to 2.0 to 4.0 bar.

Dimensions / weights approximate in mm (inches) and kg (pounds)

Actuator	**Actuator diaphragm** A	B	C	**D** Actuator yoke Type B	**E** Actuator spring holder Type 4	**Weight**
PN1500	405 (16")	180 (7")	160 (6¼")	247 (9¾")	270 (10½")	55 (121)
PN1600	465 (18 5/16")	180 (7")	160 (6¼")	247 (9¾")	270 (10½")	70 (154)