spirax sarco - SP303

SP303
03.05

IM-P370-22
CH ISSUE 1

OPERATION & MAINTENANCE
INSTRUCTIONS MANUAL

PROFIBUS PA VALVE POSITIONER

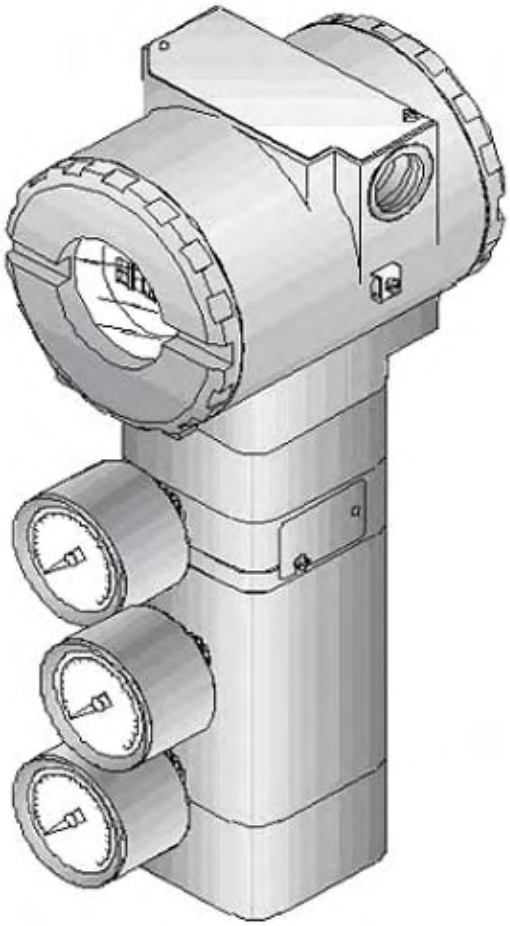

Introduction

The **SP303** is a Profibus PA valve positioner for Single (spring return) or Double acting Linear motion type control valves e. g. Globe, Gate, Diaphragm, Pinch or Clamp and Rotary motion type control valves e. g. Ball, Butterfly or Plug with pneumatic type actuators e. g. Diaphragm, Piston, Vane, or Bellows. It is based on a field-proven piezo flapper and non-contacting Hall-effect position sensor that provides reliable operation and high performance. The digital technology used in the **SP303** enabled the choice of several types of flow characterizations, an easy interface between the field and the control room and several interesting features that considerably reduce the installation, operating and maintenance costs.

The **SP303** is part of Spirax Sarco's complete 303 line of Profibus PA devices.
Some of the advantages of bi-directional digital communications are known from existing Spirax Sarcot transmitter protocols: Higher accuracy, multi-variable access, remote configuration and diagnostics, and multi-dropping of several devices on a single pair of wires.

The system controls variable sampling, algorithm execution and communication so as to optimize the usage of the network, not loosing time. Thus, high closed loop performance is achieved.

Using Profibus technology, with its capability to interconnect several devices, very large control schemes can be constructed. In order too be user friendly the function block concept was introduced .

The need for implementation of Fieldbus in small as well as large systems was considered when developing the entire 303 line of Profibus-PA devices. They have common features and can configured locally using a magnetic tool, eliminating the need for a configuration tool or console in many basic applications.

Get the best result of the **SP303** by carefully reading these instructions.

WARNING

Throughout the operation of the positioner, including self-setup, do not touch the moving parts of valve/actuator/positioner assembly as they may unexpectedly move automatically. Make sure to disconnect supply air before touching any moving parts.

NOTE

This manual is compatible with version 1XX, where 1 denotes software version and XX software release. The indication 1.XX means that this manual is compatible with any release of software version 1.

SAFETY INFORMATION

IMPORTANT
SAFETY INFORMATION:
PLEASE READ CAREFULLY

Hazards to be considered when installing/using/maintaining

1. Access
Ensure safe access and if necessary a safe working platform before attempting to work on the product.
Arrange suitable lifting gear if required.

2. Lighting
Ensure adequate lighting, particularly where detailed or intricate work is required e.g. electrical wiring.

3. Hazardous liquids or gases in the pipeline
Consider what is in the pipeline or what may have been in the pipeline at some previous time.
Consider: flammable materials, substances hazardaous to health, extremes of temperature.

4. Hazardous environment around the product
Consider, explosion risk areas, lack of oxygen (e.g. tanks, pits) dangerous gases, extremes of temperature, hot surfaces, fire hazard (e.g. during welding), excessive noise, moving machinery.
ATEX certifications are available on demand for explosion proof housings (ATEX II2GEExdIICT6) and for intrinsically safe electronic circuits (ATEX II2GEExdIICT6).

5. The system
Consider the effect on the complete system of the work proposed. Will any proposed action (e.g. closing isolating valves, electrical isolation) put any other part of the system or any other workers at risk? Dangers might include isolation of vents or protective devices or the rendering ineffective of controls or alarms.
Ensure isolation valves are turned on and off in a gradual way to avoid system shocks.

6. Pressure systems
Ensure that any pressure is isolated and safety vented to atmospheric pressure.
Consider double isolation (double block and bleed) and the locking and/or labelling of valve shut.
Do not assume the system is de-pressurized even when the pressure gauge indicates zero.

7. Temperature
Allow time for temperature to normalise after isolation to avoid the danger of burns.

8. Tools and consumables
Before starting work ensure that you have suitable tools and/or consumables available. Use only genuine Spirax Sarco replacement parts.

9. Protective clothing
Consider whether any protective clothing is required, to protect against the hazards of, for example, chemicals, high/low temperature, noise, falling objects, dangers to eyes/face.

10. Permits to work
All works must be carried out or be supervised by a suitable competent person.
Where a formal permit to work system is in force it must be complied with.
Where there is no such system, it is recommended that a responsible person knows what work is going on and where necessary arrange to have an assistant whose primary responsibility is safety. Post warning notices if necessary.

11. Electrical work
Before starting work study the wiring diagram and wiring instructions and note any special requirements. Consider particularly:
mains supply voltage and phase, local mains isolation, fuse requirements, earthing, special cables, cable entries/cable glands, electrical screening.

12. Commissioning
After installation or maintenance ensure that the system is fully functioning.
Carry out tests on any alarms or protective devices.

13. Disposal
Unwanted equipment should be disposed of in a safe manner.

14. Returning products
Customers and stockists are reminded that under EC Health, Safety and Environmental Law, when returning products to Spirax Sarco they must provide information on any hazards and the precautions to be taken due to contamination residues or mechanical damage which may present a health, safety and environmental risk. This information must be provided in writing including Health and Safety data sheets relating to any substances identified as hazardous.

Note: The products supplied by Spirax Sarco are classified as components and are not generally affected by the Machinery Directive 89/392/EEC.

Table of Contents

6. HAZARDOUS LOCATION INSTALLATION AND APPROVALS

Section 1

Installation

General

The overall accuracy of measurement and control depends on several variables. Although the converter has an outstanding performance, proper installation is essential, in order to maximize its performance.

Among all factors, which may affect converter accuracy environmental conditions are the most difficult to control. There are, however, ways to reduce the effects of temperature, humidity and vibration.

The **SP303** has a built-in temperature sensor to compensate for temperature variations. At the field, this feature minimizes the temperature variation effect.

Locating the positioner in areas protected from extreme environmental changes can minimize temperature fluctuation effects.

In warm environments, the positioner should be installed to avoid, as much as possible, direct exposure to the sun. Installation close to lines and vessels subjected to high temperatures should also be avoided.

Use of sunshades or heat shields to protect the positioner from external heat sources should be considered, if necessary.

Humidity is fatal to electronic circuits. In areas subjected to high relative humidity, the O-rings for the electronics cover must be correctly placed. Removal of the electronics cover in the field should be reduced to the minimum necessary, since each time it is removed, the circuits are exposed to humidity. The electronic circuit is protected by a humidity proof coating, but frequent exposures to humidity may affect the provided protection. It is also important to keep the covers tightened in place. Every time they are removed, the threads are exposed to corrosion, since painting cannot protect these parts. Code approved sealing methods on conduit entering the positioner should be employed.

Although the positioner is virtually insensitive to vibration, installation close to pumps, turbines or other vibrating equipment should be avoided.

Mounting

The mounting of positioner **SP303** will depend on actuator type, single (spring return) action or double action and on actuator movement, if it is linear or rotary. Two supports are required for mounting, one for the magnet and the other for the positoner itself. Spirax Sarco may supply them both since they are specified in the order code. (See Table 5.2 - Bracket Ordering Code).

Rotary Movement

Install the magnet on the valve stem using the magnet support (See Figure 1.2 - Positioner on Rotary Actuator).

Install the positioner support on the actuator. The actuator should be in accordance with standard VDI/VDE 5845, all you have to do is tighten the four screws with the lock washers on the standard support.

For special supports, refer to specify instructions. After installing the support on the actuator, it is possible to mount the positioner **SP303** on the support by means of the four screws with lock washers.

Make sure that the arrow engraved on the magnet coincides with the arrow engraved on the positioner when the valve is in mid travel.

If the installation of the positioner or magnet should be altered, or if there should be any other modification, the positioner will require a recalibration.

As to the type of valve action, refer to paragraph "Pneumatic Connections".

Linear Movement

Install the magnet on the valve stem using the magnet support (See Figure 1.3 – Positioner on Linear Actuator).

Install the positioner support on the actuator. The actuator support may be secured in place as per standard NAMUR/IEC 536-4 or in accordance with user specified boring. Install the positioner on the support and tighten the four screws in the threaded bores located on the side opposite to the pressure gages (See Figure 1.3 – Positioner on Linear Actuator). Use lock washers in order to prevent screw slackening.

Make sure that the support is not obstructing the exhaustion outlets.

Make sure that arrow engraved on the magnet coincides with the arrow engraved on the positioner when the valve is in mid travel.

If the installation of the positioner or magnet should be altered, or if there should be any other modification, the positioner will require a recalibration.

Pneumatic Connections

The supplied air to the positioner **SP303** shall be a good quality instrument air, i. e., dry, clean and non-corrosive. Refer to the Instrument Society of America Standard entitled “Quality Standard for Instrument Air” (ISA S7.3). (See “Recommendations for na Instrument Air System”).

In those applications where such requirements can not be fulfilled, the use of filters is acceptable. Positioner **SP303** may be supplied, upon request, with filters manufactured by others.

Air supply pressure to the **SP303** shall be between 1.4 bar (20 psi) and 7 bar (100 psi). In case such requirements can not be fulfilled, the use of an air pressure regulator is acceptable.

Use sealant on threads. Sealants like PTFE (Teflon) tape shall be avoided because they may fragment and eventually obstruct internal parts.

The positioner **SP303** may be supplied with pressure gages. There are taps available for IN, OUT1 and OUT2. Before connecting the pressure gages, make sure that all lines be completely purged.

Valve positioner **SP303** has two pneumatic outputs. They work on opposite directions to open or close the valve.

WARNING

The **SP303** should fail, for example, because of a power failure. The output identified as OUT1 (output 1) goes to nearly zero, while the output identified as OUT2 (output 2) goes to nearly the air supply pressure.

Pneumatic connections are identified as IN (input) for the air supply, and OUT1 and OUT2 for Output 1 and Output 2 respectively (See *Figure 1.1 – SP303 – Dimensional Drawing*). Use 1/4 NPT connections. Sealant may be used NPT threads. Connect the air supply tubing to the connection identified as IN. Make sure that the air supply pressure does not exceed the maximum rating accepted by the positioner or actuator. The tubing used to connect the positioner **SP303** to the actuator shall be as short as possible.

NOTE

Make sure that sealant does not enter the positioner.

The are six exhaust outputs in the **SP303**, all of them fitted with filters (See Figure 1.1 - SP303 Dimensional Drawing).
It is very important that such outputs are neither blocked nor obstructed, because the air must circulate freely.

All filters shall be inspected to make sure they will not obstruct the outputs (Refer to Section 4 - Maintenance Procedures).

Double Action - Air to Open (Fail Close)
Connect Output 1 (OUT1) of the positioner to the input identified as OPEN in the actuator, and connect Output 2 (OUT2) of the positioner to the input CLOSE in the actuator (See Figure 1.1 - SP303 Dimensional Drawing).

Double Action - Air to Close (Fail Open)
Connect Output 2 (OUT2) of the positoner to the input identified as OPEN in the actuator, and connect Output 1 (OUT 1) of the positioner to the input CLOSE of the actuator.

Single Action

Connect Output 1 (OUT1) of the positioner to the input of the actuator. Use a plug to block Output 2 (OUT2). (The *Figure 1.2 - Postioner on Rotary Actuator* and *Figure 1.3 - Positioner on Linear Actuator*) show the positioner in rotary and linear actuators).

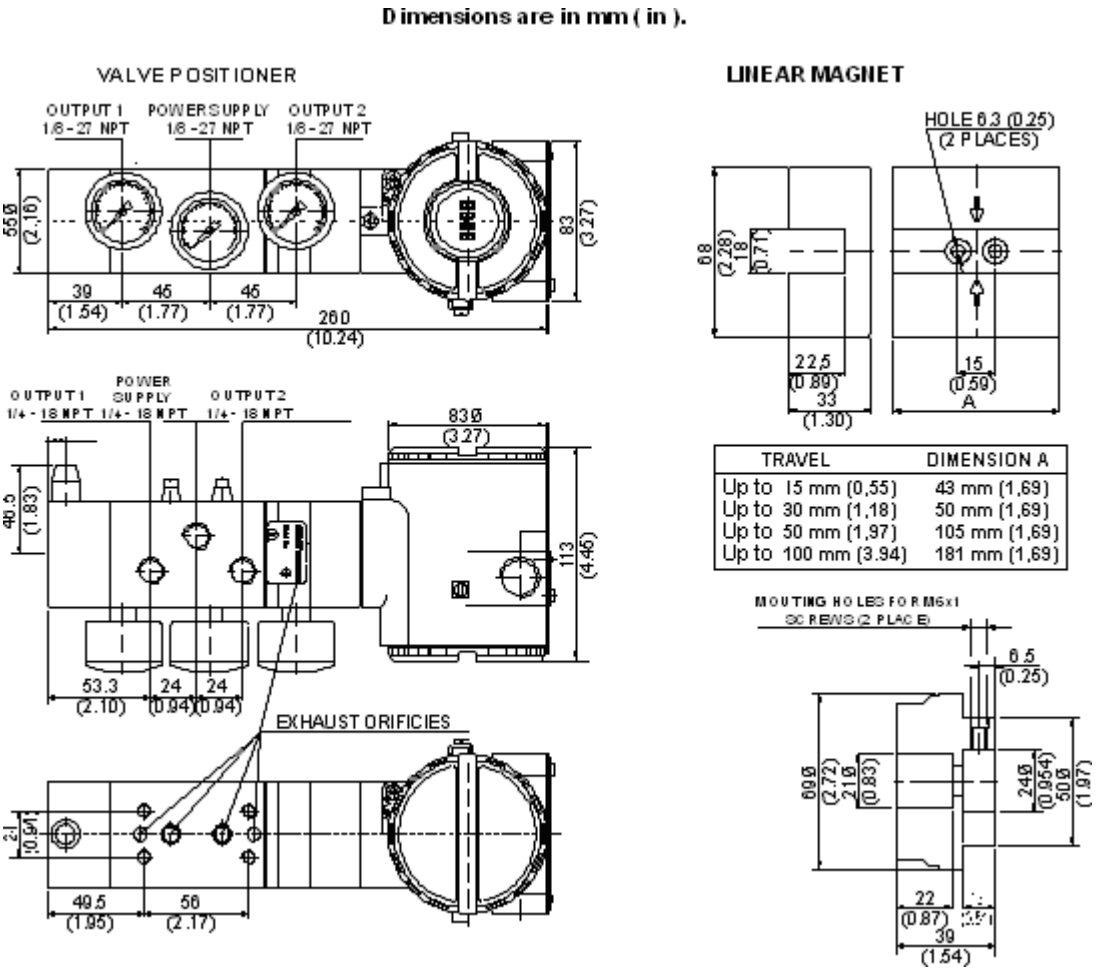

Figure 1.1 - SP303 Dimensional Drawing

Figure 1.2 - Positioner on Rotary Actuator

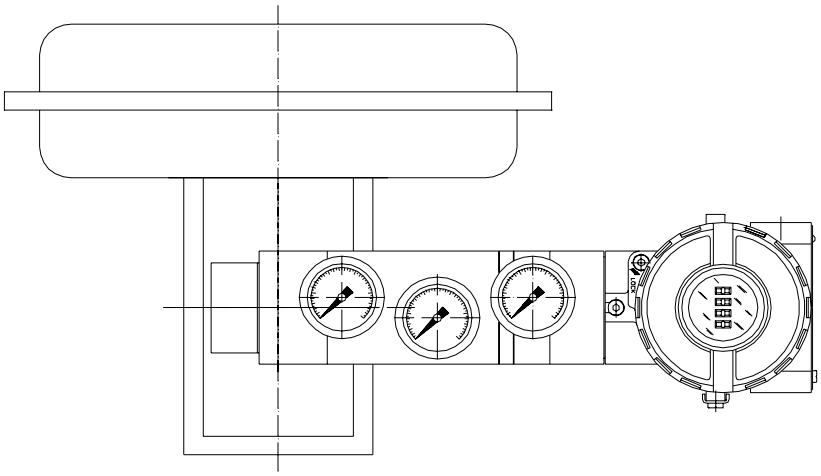

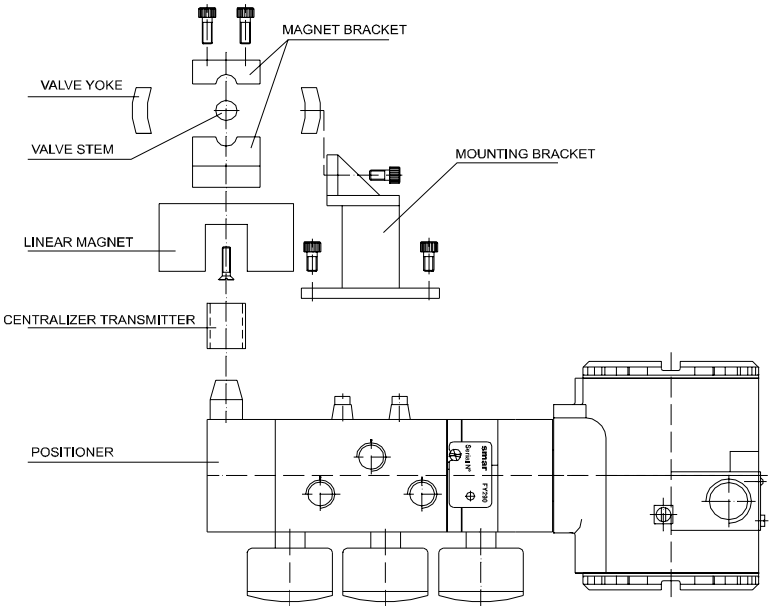

Figure 1.3 - Positioner on Linear Actuator

Electronic Housing Rotating

The electronic housing can be rotated in order to have a better position of the digital display. To rotate it, use the Housing Rotation SetScrew. (See Figure 1.4 - Cover Locking and Housing Rotation Set Screw).

The local indicator itself can also be rotated. (See Figure 2.4 - Rotating the position of the LCD Display).

Electric Wiring

Reach the wiring block by removing the Electrical Connection Cover. This cover can be locked by the cover locking screw. To release the cover, rotate the locking screw clockwise.
The wiring block has screws on which fork or ring-type terminals can be fastened.
(See Figure 1.5 - Wiring Block).

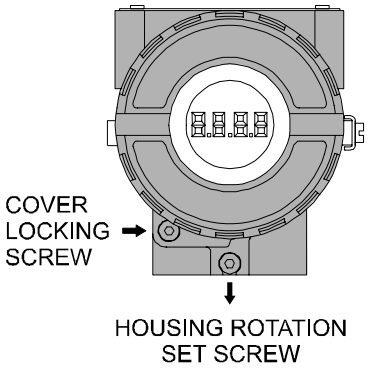

Figure 1.4 - Cover Locking and Housing Rotation Set Screw

For convenience there are two ground terminals: one inside the cover and one external, located close to the conduit entries. (See Figure 1.5 - Wiring Block).

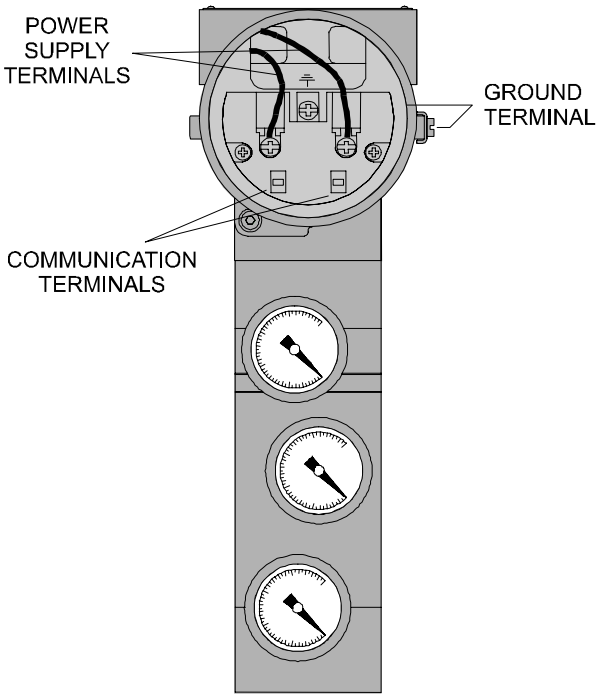

Figure 1.5 - Wiring Block

The **SP303** uses the 31.25 kbit/s voltage mode option for the physical signaling. All other devices on the same bus must use the same signaling. All devices are connected in parallel along the same pair of wires.

Various types of Fieldbus devices may be connected on the same bus.

The SP303 is powered via the bus. The limit for such devices is according to the DP/PA coupler limitations for one bus for non-intrinsically safe requirement. In hazardous area, the number of devices may be limited by intrinsically safe restrictions, according to the coupler DP/PA and barriers limitations.

WARNING

HAZARDOUS AREAS

In hazardous areas with explosion proof requirements, the covers must be tightened with at least 8 turns. In order to avoid the penetration moisture or corrosive gases, tighten the O'ring until feeling the O'ring touching the housing. Then, tighten more 1/3 turn (120°) to guarantee the sealing. Lock the covers using the locking screw.

In hazardous zones with intrinsically safe or non-incentive requirements, the circuit entity parameters and applicable installation procedures must be observed.

Cable access to wiring connections is obtained by the two conduit outlets. Conduit threads should be sealed by means of code-approved sealing methods. The unused outlet connection should be plugged and sealed accordingly.

Should other certifications be necessary, refer to the certification or specific standard for installation limitations.

The Figure 1.6 - Conduit Installation Diagram, shows the correct installation of the conduit, in order to avoid penetration of water, or other substance, which may cause malfunctioning of the equipment.

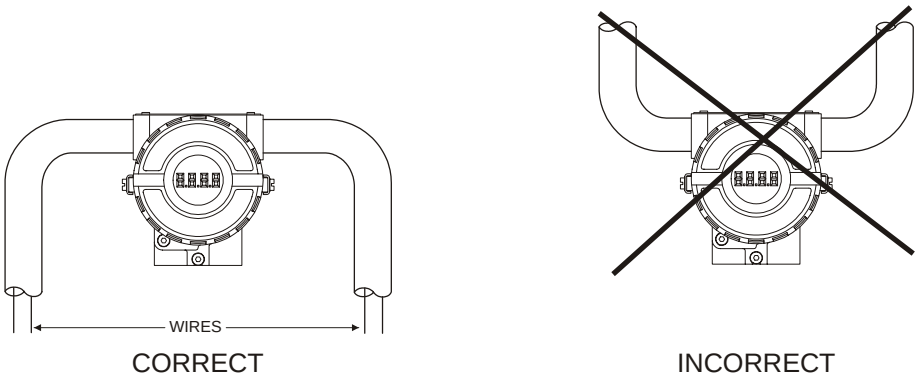

Figure 1.6 - Conduit Installation Diagram.

The SP303 is protected against reverse polarity, and can withstand ± 35 Vdc without damage, but it will not operate when in reverse polarity.

NOTE

Please refer to the General Installation, Operation and Maintenance Procedures Manual for more details.

Topology and Network Configuration

Bus topology (See Figure 1.7 - Bus **Topology**) and tree topology (See Figure 1.8 - **Tree Topology**) are supported. Both types have a trunk cable with two terminations. The devices are connected to the trunk via spurs. The spurs may be integrated in the device giving zero spur length. A spur may connect more than one device, depending on the length. Active couplers may be used to extend spur length.

Active repeaters may be used to extend the trunk length.

The total cable length, including spurs, between any two devices in the Fieldbus should not exceed 1900m.

The connection of couplers should be kept less than 15 per 250m. In following figures the DP/PA link depends on the application needs.

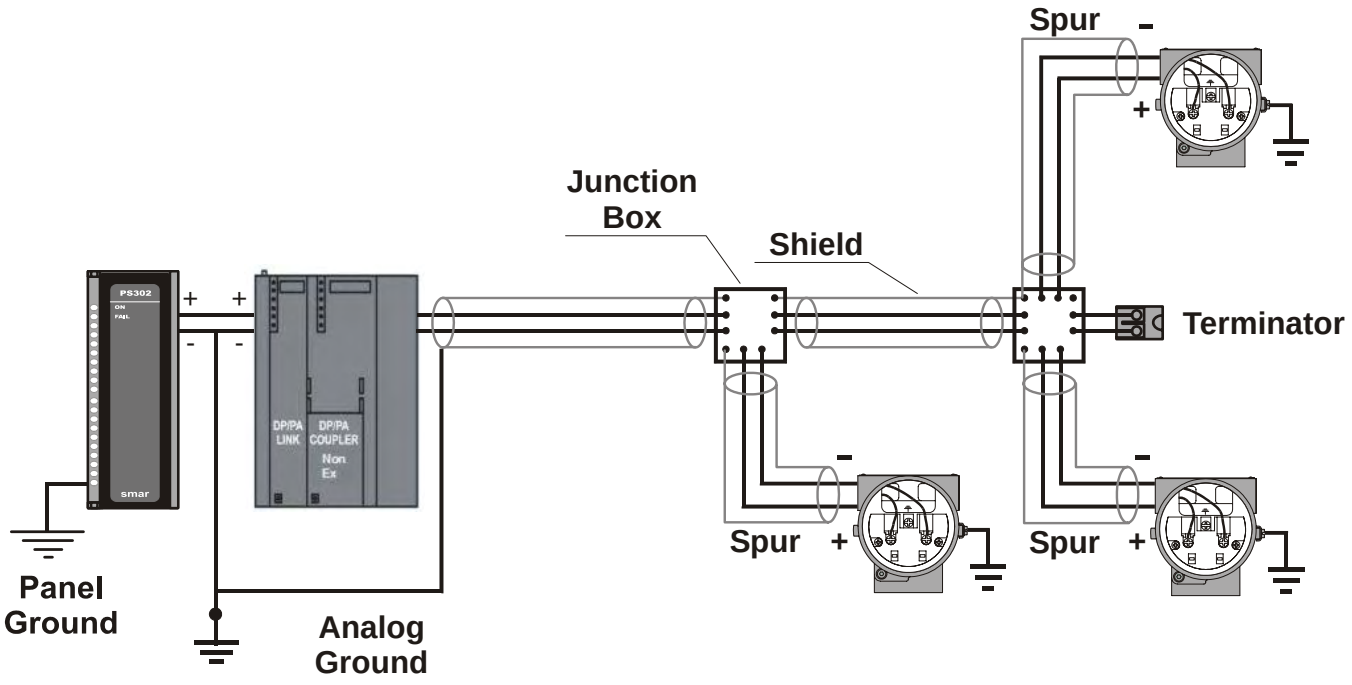

Figure 1.7 - Bus Topology

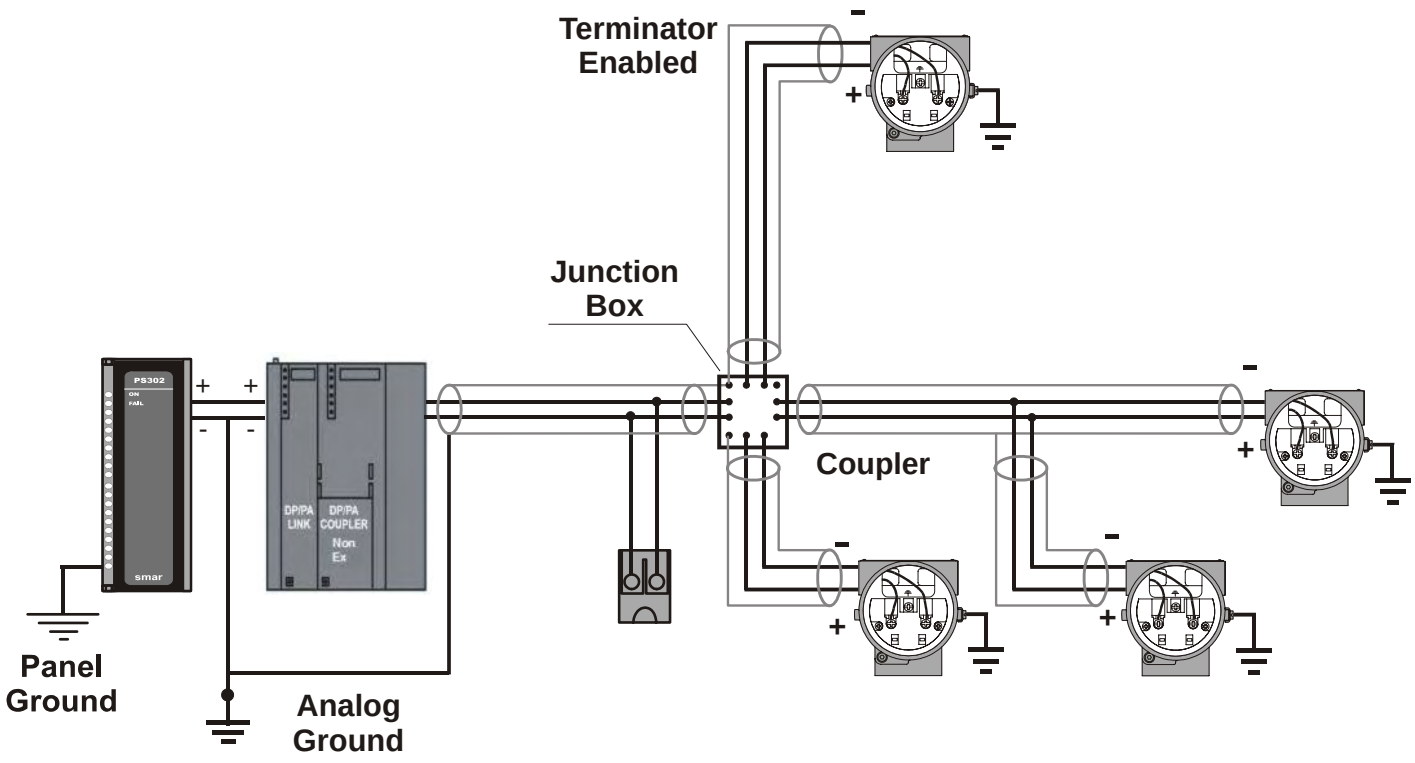

Figure 1.8 - Tree Topology

Intrinsic Safety Barrier

When the Fieldbus is in an area requiring intrinsic safety, a barrier must be inserted on the trunk between the power supply and the DP/PA coupler, when it is Non-Ex type.

Use of **SB302** is recommended.

Jumper Configuration

In order to work properly, the jumpers J1 and W1 located in the **SP303** main board must be correctly configured (See Table 1.1 - Description of the Jumpers).

J1	This jumper enables the simulation mode parameter in the AO block.
W1	This jumper enables the local adjustment programming tree.

Table 1.1 - Description of the Jumpers

Power Supply

The **SP303** receives power from the bus via the signal wiring. The power supply may come from a separate unit or from another device such as a controller or DCS.

The voltage should be between 9 to 32 Vdc for non-intrinsic safe applications.

A special requirement applies to the power supply used in an intrinsically safe bus and depends on the type of barrier used.

Use of **PS302** is recommended as power supply.

Recommendations for an Instrument Air System

Instrument air quality shall be superior to that of industrial compressed air. Humidity, airborne particles and oil may impair the instrument operation, either temporarily or permanently in case of internal parts wearing.

As per standard *ANSI/ISA S7.3 - Quality Standard for Instrument Air*, instrument air shall the following characteristics:

Dew point	10°C below minimum plant temperature
Size of particles (airborne)	3 μm (maximum)
Oil content	1 ppm w/w (maximum)
Contaminants	free from toxic flammable gases

Table 1.2 - Quality Standard for Instrument Air

Standard *ISA RP7.7 - Recommended Practice for Producing Quality Instrument Air* contains general instructions for air production within the quality parameters defined in standard ANSI/ISA S7.3. This standard recommends that the compressor intake be located in an area free from process spills and fitted with and adequate filter. It also recommends the use of non-lubricated type compressors, in order to prevent air contamination by lubricating oil. Where lubricated type compressors are adopted, there shall be used means to make the air oil free.

The Figure 1.9 - Air Supply System and Figure 1.10 - Air Quality Conditioning **System** show a typical system for Air Supply and Air Quality Conditioning.

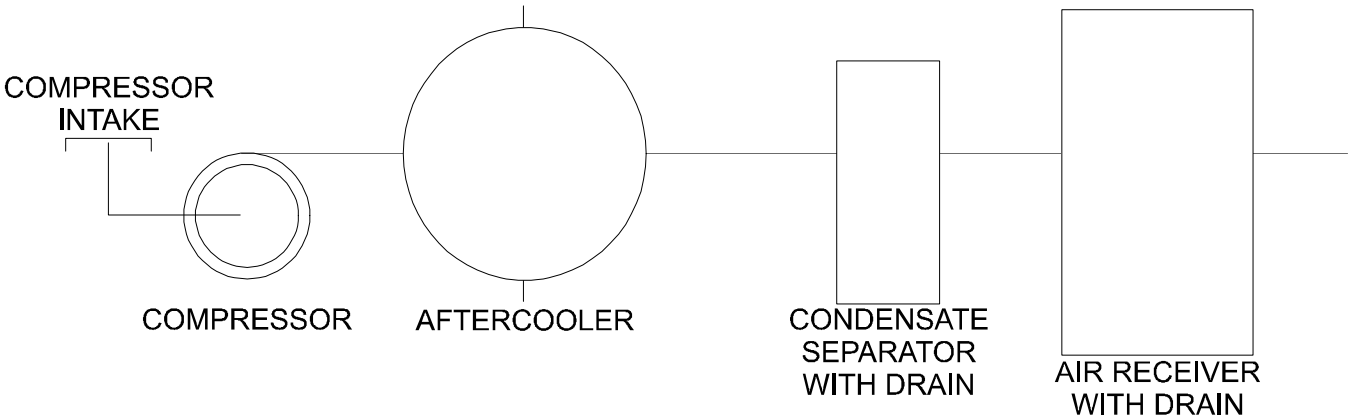

Figure 1.9 - Air Supply System

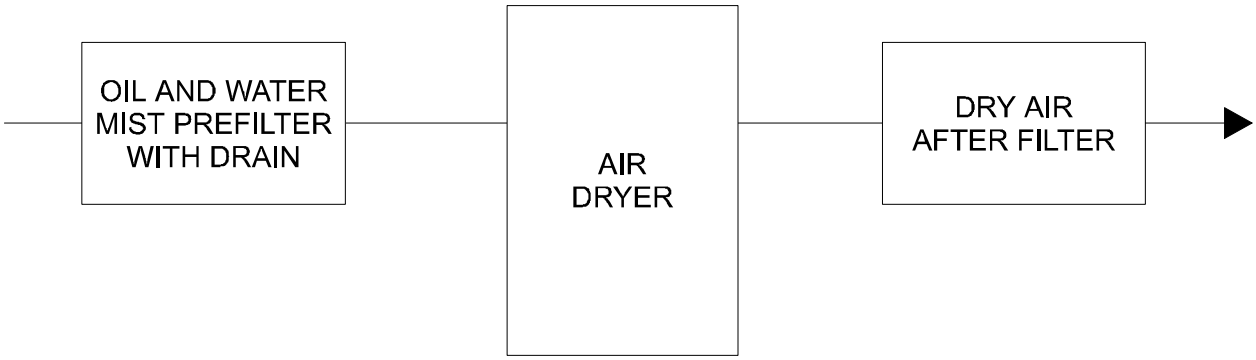

Figure 1.10 - Air Quality Conditioning System

Operation

Functional Description - Output Module

The main parts of the output module are the pilot, servo, Hall effect sensor and the output control circuit. (See Figure 2.1 - Pneumatic Transducer Schematic).

The control circuit receives a digital setpoint signal from the CPU and a feedback signal from the Hall effect sensor.

The pneumatic circuit is based on a well-known and widely adopted technology, which is described on item Nozzle-and-Vane and Spool.

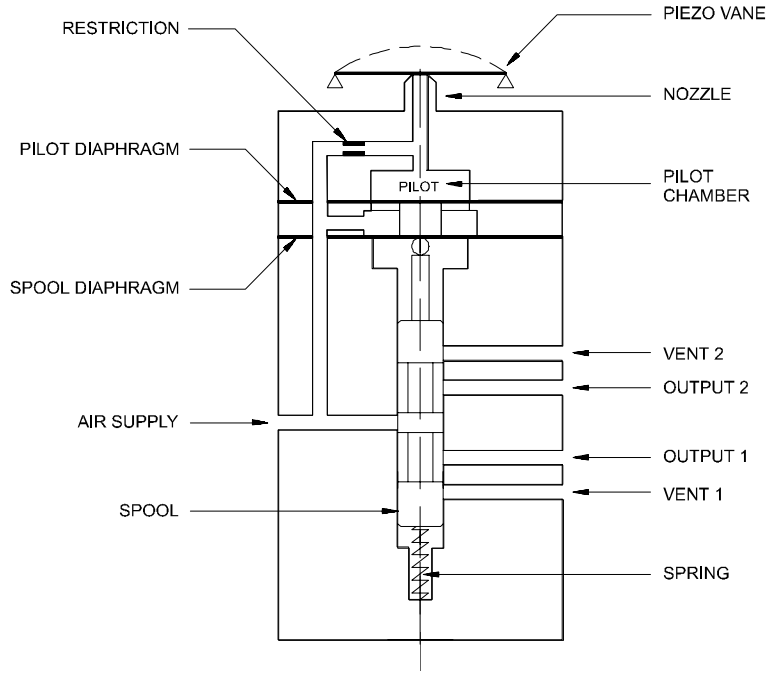

Figure 2.1 - Pneumatic Transducer Schematic

A piezoelectric disk as flapper in the pilot stage. The flapper is deflected when the control circuit applies a voltage. A small stream of air flowing through the nozzle is obstructed causing an increase in pressure in the pilot chamber, this is called the pilot pressure.

The pilot pressure is too low, with flowing capacity, and for this reason it must be amplified in the servo section. The servo section includes a diaphragm in the pilot chamber and a smaller one in the spool chamber. The pilot pressure applies a force at the pilot chamber's diaphragm which, in the equilibrium state, will be equal to the force applied by the spool valve at the smaller diaphragm which is in the spool chamber.

Therefore, upon every position change caused by the positioner, the pilot pressure increases or decreases as explained in the pilot stage section; such change in pilot pressure causes an upward or downward valve travel wich alters the pressure at output 1 and output 2 until a new equilibrium is reached, which results in a new valve position.

Functional Description-Electronics

Refer to the block diagram (See Figure 2.2 - SP303 Block Diagram). The function of each block is described below.

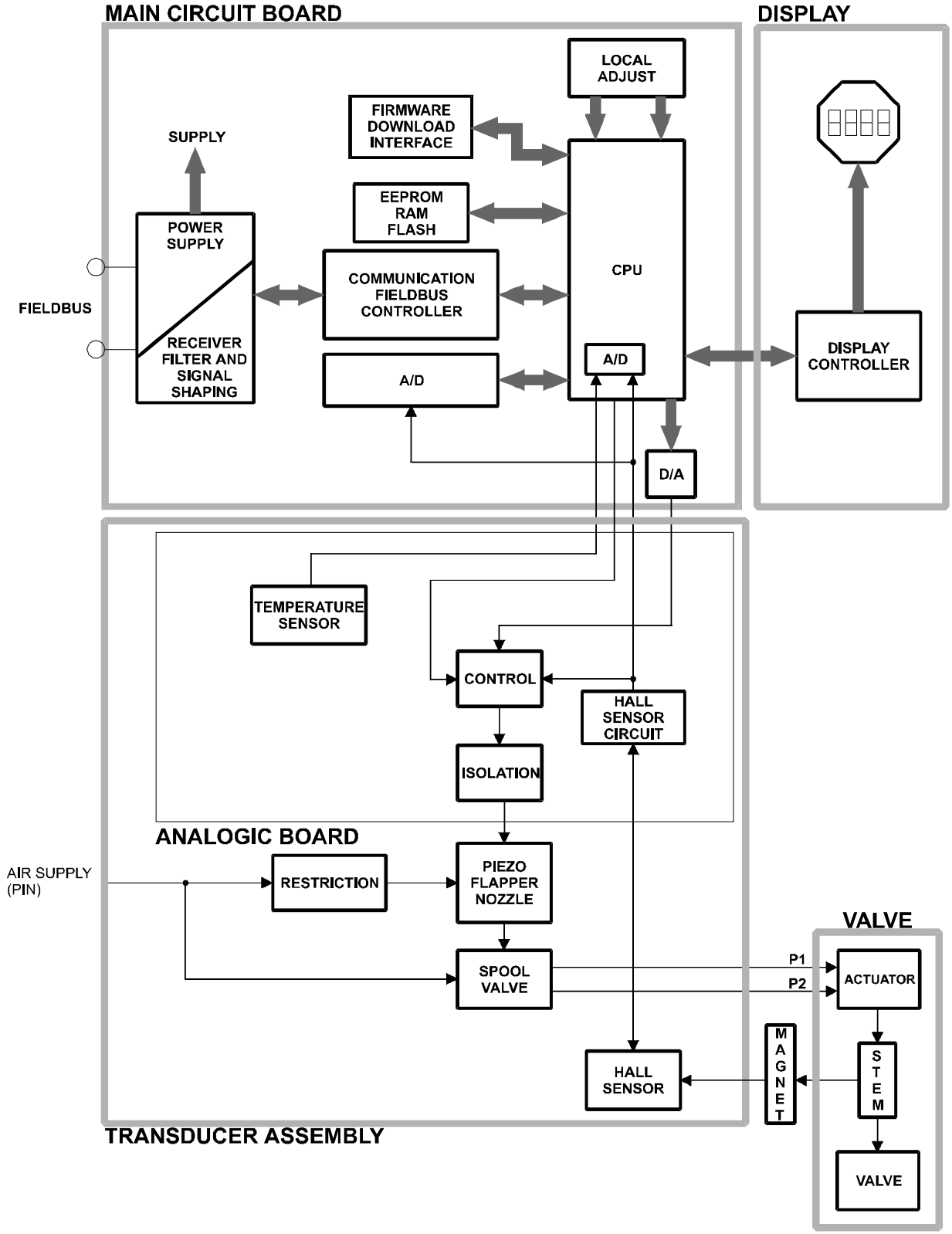

Figure 2.2 - SP303 Block Diagram

D/A
Receives the signal from the CPU and converts it to an analog voltage proportional the desired position, used by the control.

Control
Controls the valve position according to the data received from the CPU and the Hall effect sensor feedback.

A/D
Receives the signal from the Hall Sensor and converts it to a digital value proportional to the actual valve position.

Hall Effect Sensor
Measures the position actual and feedback to the control and CPU.

Temperature Sensor
Measures the temperature of the Transducer Assembly.

Isolation
Its function is to isolate the fieldbus signal from the piezoelectric.

EEPROM
A non-volatile memory which stores configuration data as a backup.

Central Processing Unit (CPU), RAM, PROM and EEPROM
The CPU is the intelligent portion of the positioner, being responsible for the management and operation of block execution, self-diagnostics and communication. The program is stored in PROM. For temporary storage of data there is a RAM. The data in the RAM is lost if the power is switched off, however the device also has a nonvolatile EEPROM where data that must be retained is stored. Examples of such data are: calibration and valve configuration.

Communication Controller
A monitor line activity, modulates and demodulates communication signals and inserts and deletes start and end delimiters.

Power Supply
The positioner circuit receives supply from a 9 to 32 Vdc power supply. Use of **PS302** is recommended.

Display Controller
Receives data from the CPU and drives the (LCD) Liquid Crystal Display.

Local Adjustment
Local adjustment is provided by means of two magnetic naturally actuated switches with no external electric or mechanical contact, by using a magnetic screwdriver.

Piezo Flapper Nozzle
The unit flapper nozzle converts the movement of piezoelectric into a pneumatic signal to control pressure in the pilot chamber.

Restriction
The restriction and the nozzle form a pressure-divided circuit. Air is supplied to the nozzle through a restriction.

Spool
The spool ensures a quick valve positioning by providing a greater air flow than one provided by the restriction.

Introduction to Fieldbus Application

From a Fieldbus point of view, the **SP303** is not an assembly of electronics, housing and sensor forming a positioner, but a network node containing function blocks.

Basically, it contains one output transducer block, one resource block, one display transducer block and Analog Output block .

These blocks are models of the functionality that the **SP303** provides for a control system. They can loosely be said to make up part of the application that is performed in the **SP303**.

Function Blocks

Models the basic user configurable functionality of the device. Typically these functionality were previously available in individual devices. For example, the **Analog output block**
provides the functionality of what is known as a positioner. It makes the Fieldbus signal available to the **SP303** output hardware. It also optionally performs output reversing.

All information regarding to Function Blocks are available on the “Function Blocks Instruction Manual”.

Transducer Blocks

These are responsible for the interface between the function blocks and the **SP303** output channel hardware.

Output transducer block
It is responsible for the processing of the output signal, such as output characterization and trim.

Display transducer block
It is responsible for the display and local adjustment.

Physical Block

It is responsible for monitoring the operation of the device. It also contains device information such as serial equipment number.

The Local Indicator

The local indicator is required for signaling and operation in local adjustment. The parameters desired by the user to be viewed on the LCD display should be configured in the display block.

Normal Indicator
During normal operation, the **SP303** remains in the monitoring mode and the display will always indicate the variable of monitoring configured in the display block. The user can configure up to six parameter and chooses up to two to swtching on the LCD.For details, please see the general manual.It is recommend to configure the position of the valve in % (percentage).
The possible configuration and monitoring operation are shown on.

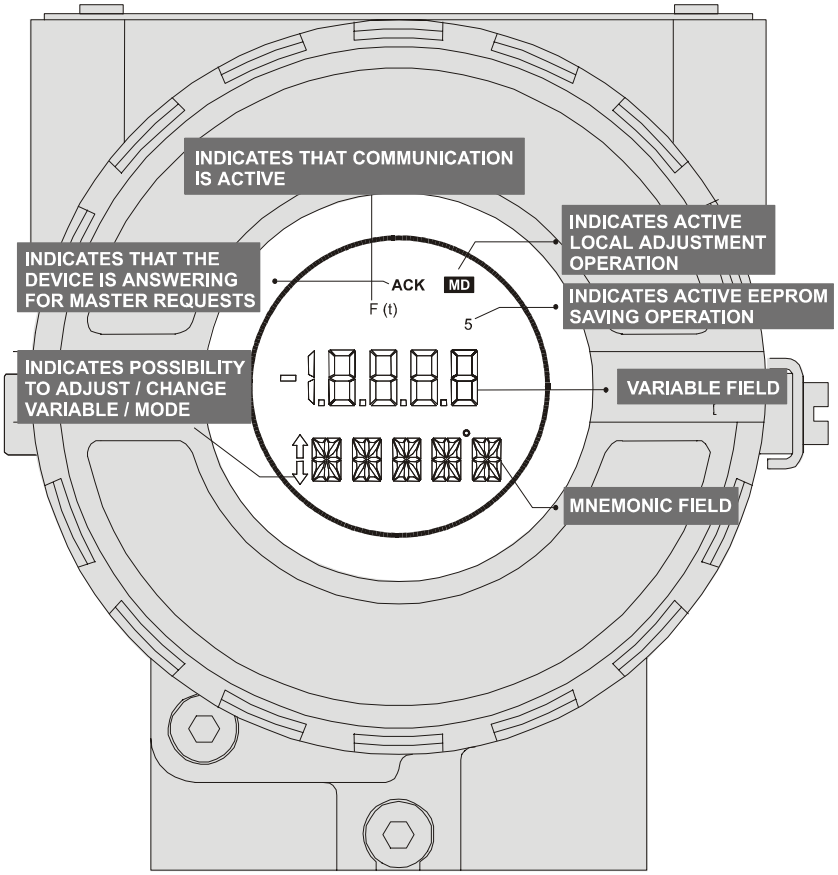

Figure 2.3 - Local Indicator

Upon receiving power, the **SP303** initializes the position indication on the display, by showing model **SP303** and its software version (X.XX). The indication should be higher than ±19999 it will be displayed as two digits and an exponent.

Monitoring
During normal operation, **SP303** remains in the monitoring mode.

The display simultaneously shows readout and some other information.

Normal displaying is interrupted when the magnetic tool is placed in orifice marked as **Zero** and the indicator **MD** is showed on the display. After this, withdraw the magnetic tool off the orifice **Z** and put it in the orifice marked with the **S** letter. With the tool in the orifice, wait for 3 seconds. Withdraw again the magnet tool and wait for 3 seconds. Put it now in the orifice **S** and it will appear the message of " LOC ADJ" (Local Adjust). Withdraw the tool and put it in the orifice **Z**. After this, you can browse to all the parameters configured in the display block.

Four Different Positions to the LCD Display

As you can see below, there are four different positions for attaching the LCD display on the device in order to adequate it for a better view of its information.

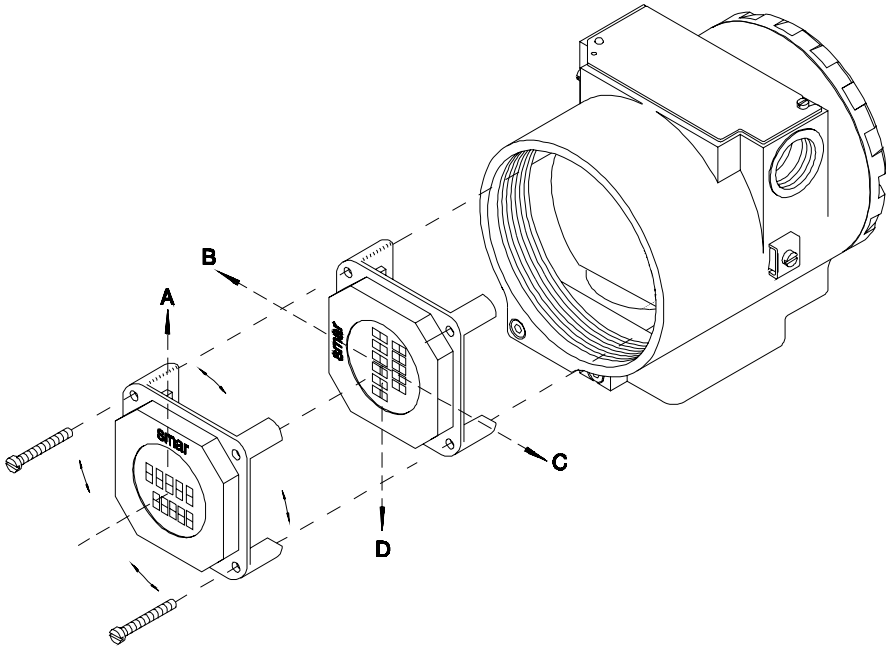

Figure 2.4 - Rotating the position of the LCD Display

Configuration

This section describes the characteristics of the blocks in the **SP303**. They follow the Profibus PA specifications, but in terms of transducer blocks, the output transducer block and display, they have some special features on top of this.

The **SP303** contains one Analog Output block, one resource block, one display transducer block and one transducer block.

For explanation and details of function blocks, see the “Function Blocks Manual”.

The 303 Spirax Sarco family is integrated in **Simatic PDM**, from Siemens. It is possible to integrate any 303 Spirax Sarco device into any configuration tool for Profibus PA devices. It is necessary to provide a Device Description or Drive according to the configuration tool. In this manual is taken several examples using **Simatic PDM**.

Transducer Block

Transducer block insulates function block from the specific I/O hardware, such as sensors, actuators. Transducer block controls access to I/O through manufacturer specific implementation. This permits the transducer block to execute as frequently as necessary to obtain good data from sensors without burdening the function blocks that use the data. It also insulates the function block from the manufacturer specific characteristics of certain hardware. By accessing the hardware, the transducer block can get data from I/O or passing control data to it. The connection between Transducer block and Function block is called channel. These blocks can exchange data from its interface.

Normally, transducer blocks perform functions, such as linearization, characterization, temperature compensation, control and exchange data to hardware.

How to Configure a Transducer Block

The transducer block has an algorithm and a set of contained parameters.

The algorithm describes the behavior of the transducer as a data transfer function between the I/O hardware and other function block. The set of contained parameters, it means, you are not able to link them to other blocks and publish the link via communication, defines the user interface to the transducer block. They can be divided into Standard and Manufacturer Specific.

The standard parameters will be present for such class of device, as pressure, temperature, actuator, etc., whatever is the manufacturer. Oppositely, the manufacturers specific ones are defined only for its manufacturer. As common manufacturer specific parameters, we have calibration settings, material information, linearization curve, etc.

When you perform a standard routine as a calibration, you are conducted step by step by a method. The method is generally defined as guide line to help the user to make common tasks. The **Configuration Tool** identifies each method associated to the parameters and enables the interface to it.

Functional Diagram of the Positioner Transducer Block

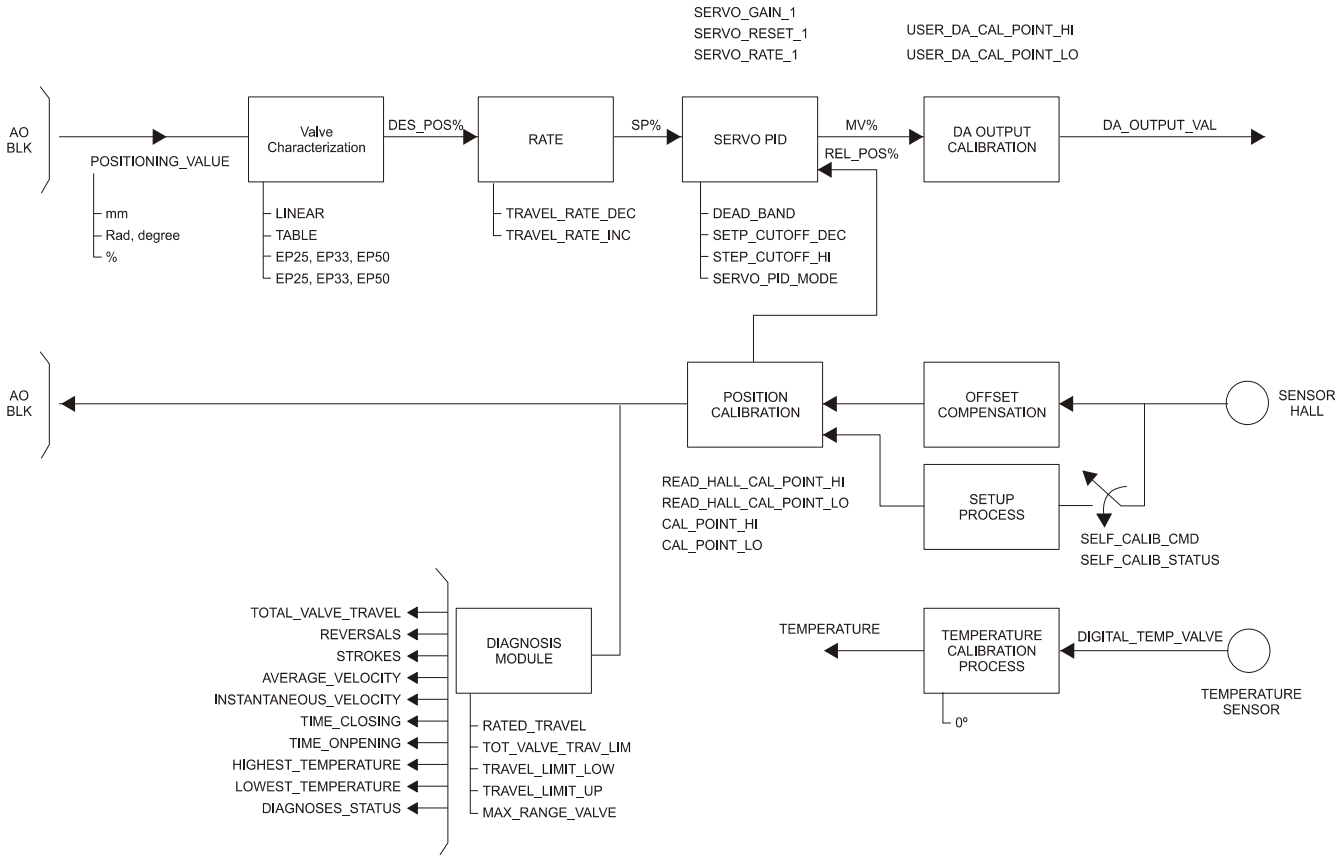

Figure 3.1 - Functional Diagram of the Positioner Transducer Block

Transducer Block Standard Parameter Descriptions

Parameter	Transducer Block Description
ACTUATOR_ SER_NUM	Serial-number of the actuator belonging to the positioner or the electronic device.
ACTUATOR_ACTION	Fail-Safe position for power-loss of the actuator resp. the valve: 0 = not initialized 1 = opening (100%) 2 = closing (0%) 3 = none / remains in actual position
ACTUATOR_MAN	Name of Actuator-Manufacturer.
ACTUATOR_TYPE	Type of actuator: 0 = electro-pneumatic 1 = electric 2 = electro-hydraulic 3 = others
ACT_STROKE_TIME_DEC	Minimum of time to move from OPEN to CLOSE position (in sec.) for total system (positioner, actuator and valve). Measured while commissioning.
ACT_STROKE_TIME_INC	Minimum of time to move from CLOSE to OPEN position (in sec.) for total system (positioner, actuator and valve). Measured while commissioning.
ADD_GEAR_ID	Manufacturer specific type identification of the additional component (e.g. a gearbox, booster) mounted between the actuator and valve.
ADD_GEAR_INST_DATE	Installation date of the additional component (e.g. gearbox, booster) mounted between the actuator and valve
ADD_GEAR_MAN	Manufacturer name of the additional component (e.g. gearbox, booster) mounted between the actuator and valve.
ADD_GEAR_SER_NUM	Serial number of the additional component (e.g. gearbox, booster) mounted between the actuator and valve.
DEADBAND	Deadband in percent of travel span. Travel span correspondents to OUT_SCALE.
DEVICE_CALIB_DATE	Date of last calibration of the device.
DEVICE_CONFIG_DATE	Date of last configuration of the device.
LIN_TYPE	Type of linearisation. 0 = no linearisation (mandatory) 1 = linearisation table (optional) 240 Manufacturer specific 249 Manufacturer specific 250 Not used 251 None 252 Unknown 253 Special
FEEDBACK_VALUE	The actual position of the final control element in units of OUT_SCALE.
POSITIONING_VALUE	The actual command variable for the final control element in units of OUT_SCALE. Status BAD will drive the actuator to the fail-safe position defined by ACTUATOR_ACTION.
RATED_TRAVEL	Nominal stroke of the valve in units of OUT_SCALE.

Parameter	Transducer Block Description
SELF_CALIB_CMD	Initiation of a device-specific (manufacturer specific) calibration-procedure. 0 = default value; no reaction of the field device (mandatory) 1 = start zero point adjustment (optional) 2 = start self calibration / initialization (optional) 7 = reset total valve travel limit exceeded“ CB_TOT_VALVE_TRAV (optional) and reset Accumulated valve travel“ TOTAL_VALVE_TRAVEL (optional) 10 = reset internal control loop disturbed“ CB_CONTR_ERR (optional) 255 = abort current calibration-procedure (optional) Spirax Sarco: 0 = default value; no reaction of the field device 2 = start self calibration / initialization 7 = reset total valve travel 255 = abort current calibration-procedure
SELF_CALIB_STATUS	Result or status of the device-specific (manufacturer specific) calibration-procedure. 0 = undetermined (mandatory) 2 = aborted (optional) 4 = error in mechanical system (optional) 11 = timeout (optional) 20 = aborted by means of „Emergency override activ“ CB_OVERRIDE (optional) 30 = zero point error (optional) 254 = erfolgreich (optional) 255 = no valid data (optional) Spirax Sarco: 0 = Self Calibration OK. 3 = No magnet part detected. 4 = Error in mechanical system. 11 = Timeout. 12 = Pressure problem.
SERVO_GAIN_1	Proportional-action coefficient for both moving directions.
SERVO_RATE_1	Derivative-action coefficient for both moving directions.
SERVO_RESET_1	Integral-action coefficient for both moving directions.
SETP_CUTOFF_DEC	When the servo setpoint goes below the defined percent of span, the position goes to the limit position CLOSE. With electro-pneumatic actuator, this is done by totally ventilate/filling of the actuator (ref. to fail-safe position.) With electric actuator, the actuator goes motor-driven to the limit position CLOSE.

Parameter	Transducer Block Description
SETP_CUTOFF_INC	When the servo setpoint goes above the defined percent of span, the position goes to the limit position OPEN. With electro-pneumatic actuator, this is done by totally ventilate/filling of the actuator (ref. to fail-safe position.)
TAB_ENTRY	The index parameter identifies which element of the table is in the X_VALUE and Y_VALUE parameter currently
TAB_X_Y_VALUE	The X_Y_VALUE parameter contains one value couple of the table
TAB_MIN_NUMBER	For device internal reasons (e.g. for calculation), sometimes it is necessary to use a certain number of table values in minimum. This number is provided in the TAB_MIN_NUMBER parameter.
TAB_MAX_NUMBER	TAB_MAX_NUMBER is the maximum size (number of X_VALUE and Y_VALUE values) of the table in the device.
TAB_ACTUAL_NUMBER	Contains the actual numbers of entries in the table. It shall be calculated after the transmission of the table is finished.
TAB_OP_CODE	The modification of a table in a device influences the measurement or actuation algorithms of the device. Therefore an indication of a starting and an end point is necessary. The TAP_OP_CODE controls the transaction of the table. 0: not initialised 1: new operation characteristic, first value (TAB_INDEX=1), old curve cleared 2: reserved 3: last value, end of transmission, check table, swap the old curve with the new curve, actualise ACTUAL_NUMBER. 4: delete point of table with actual index (optional), sort records with increasing Charact-Input-Value, assign new indexes, decrement CHARACT_NUMBER. 5: insert point (Charact-Input-Value relevant) (optional), sort records with increasing Charact-Input-Value, assign new indexes. Increment CHARACT_NUMBER. 6: replace point of table with actual index (optional). It is possible to read a table or parts of the table without start an stop an interaction (TAB_OB_CODE 1 and 3). The start is indicated by set TAB_ENTRY to 1.
TAB_STATUS	It is common to provide a plausibility check in the device. The result of this check is indicated in the TAB_STATUS parameter. 0: not initialised 1: good (new table is valid) 2: not monotonous increasing (old table is valid) 3: not monotonous decreasing (old table is valid) 4: not enough values transmitted (old table is valid) 5: too many values transmitted (old table is valid) 6: gradient of edge too high (old table is valid) 7: Values not excepted (old values are valid) 8 - 127 reserved > 128 manufacturer specific
TOTAL_VALVE_TRAVEL	Accumulated valve travel in nominal duty cycles.
TOT_VALVE_TRAV_LIM	Limit for the TOTAL_VALVE_TRAVEL in nominal duty cycles.
TRAVEL_LIMIT_LOW	Lower limit of the valve position in percent of travel span. Travel span correspondents to OUT_SCALE.

Parameter	Transducer Block Description
TRAVEL_LIMIT_UP	Upper limit of the valve position in percent of travel span. Travel span correspondents to OUT_SCALE.
TRAVEL_RATE_DEC	Configurable seconds to full span change (closing time of the valve) in seconds.
TRAVEL_RATE_INC	Configurable seconds to full span change (opening time of the valve) in seconds.
VALVE_MAINT_DATE	Date of last valve maintenance.
VALVE_MAN	Name of Valve Manufacturer.
VALVE_SER_NUM	Serial-number of the valve belonging to the positioner or the electronic device.
VALVE_TYPE	Type of valve: 0 = linear moving valve, sliding valve 1 = rotary moving valve, part-turn 2 = rotary moving valve, multi-turn

Table 3.1 - Transducer Block standard parameter description

Transducer Block Specific Parameter Descriptions

Parameter	Transducer Block Description
AIR_TO	Air to Open/Close. {0, "Open"}, {1, "Close"}
CAL_POINT_HI	The highest calibrated point.
CAL_POINT_LO	The lowest calibrated point.
CAL_MIN_SPAN	The minimum calibration span value allowed
CAL_UNIT	Engineering units code for the calibration values, %(1342).
FEEDBACK_CAL	The position value used to correct a calibration.
CAL_CONTROL	Enable and disable a calibration method.
BACKUP_RESTORE	This parameter is used to do backup or to restore configuration data. { 0, "None" }, { 1, "Factory Cal Restore" }, { 2, "Last Cal Restore" }, { 3, "Default Data Restore" }, { 5, "Sensor Data Restore" }, { 11, "Factory Cal Backup" }, { 12, "Last Cal Backup" }, { 15, "Sensor Data Backup" }
SECONDARY_VALUE	The secondary value related to the sensor.
SECONDARY_VALUE_UNIT	The engineering units to be used with the secondary value, °C (1001).
CAL_TEMPERATURE	The temperature value used to calibrate the temperature sensor.
SERVO_PID_BYPASS	Enable and disable the servo PID. {0, "Disable" }, {1, "Enable" }

Parameter	Transducer Block Description
SERVO_PID_ERROR_PER	The percent error value for the servo PID.
SERVO_PID_INTEGRAL_PER	The percent integral value for the servo PID.
SERVO_MV_PER	The percent measured value for the servo PID.
MODULE_SN	The module manufacturer identification number.
REVERSALS	Number of reversals.
STROKES	Number of strokes.
AVERAGE_VELOCITY	The average velocity of valve.
INSTANTANEOUS_VELOCITY	The instantaneous velocity of valve.
TIME_CLOSING	The time to go from 100.0% to 0.0%.
TIME_OPENING	The time to go from 0.0% to 100.0%.
MAX_RANGE_VALVE	The maximum range valve.
HIGHEST_TEMPERATURE	The highest measured temperature.
LOWEST_TEMPERATURE	The lowest measured temperature.
DIAGNOSES_STATUS	Indicates the status of diagnoses: { 0, "None"}, { 2, "Output Module Not Initialized"}, { 4, "No Valve Movement or Slow Valve Movement or Low Air Supply or No Magnet Detected"}, { 6, "(No Valve Movement or Slow Valve Movement or Low Air Supply or No Magnet Detected) and (Output Module Not Initialized)"}, { 8, "Travel Limit Excedeed"}, { 10, "Travel Limit Excedeed and Output Module Not Initialized"}, { 12, "Travel Limit Excedeed and (No Valve Movement or Slow Valve Movement or Low Air Supply or No Magnet Detected)"}, { 14, "(Travel Limit Excedeed) and (No Valve Movement or Slow Valve Movement or Low Air Supply or No Magnet Detected) and (Output Module Not Initialized)"}, { 16, "Temperature Out of work range"}, { 18, "Temperature Out of work range and Output Module Not Initialized"}, { 20, "Temperature Out of work range and (No Valve Movement or Slow Valve Movement or Low Air Supply or No Magnet Detected)"}, { 22, "Temperature Out of work range and (No Magnet Detected and Output Module Not Initialized)"}, { 24, "Travel Limit Excedeed and Temperature Out of work range"}, { 26, "Travel Limit Excedeed and Temperature Out of work range and Output Module Not Initialized"}, { 28, "Travel Limit Excedeed and Temperature Out of work range and (No Valve Movement or Slow Valve Movement or Low Air Supply or No Magnet Detected)"}, { 30, "Travel Limit Excedeed and Temperature Out of work range and (No Valve Movement or Slow Valve Movement or Low Air Supply or No Magnet Detected) and Output Module Not Initialized"}, { 32, "Output Module Not Detected"}
DIGITAL_HALL_VALUE	Value and Status for Hall sensor.
HALL_COMPENSATED	Value for Hall sensor after compensation of offset.

Parameter	Transducer Block Description
HALL_OFFSET_CONTROL	Enable and disable for offset compensation. {0, "Disable"}, {1, "Enable"}
READ_HALL_CAL_POINT_HI	The highest calibrated point for Hall sensor.
READ_HALL_CAL_POINT_LO	The lowest calibrated point for Hall sensor.
DA_OUTPUT_VALUE	Value and status for DA output.
USER_DA_CAL_POINT_HI	The highest calibrated point for DA output.
USER_DA_CAL_POINT_LO	The lowest calibrated point for DA output.
PIEZO_ANALOG_VOLTAGE	The analog voltage for piezo.
POT_DC	The value for POT DC.
MAIN_LATCH	Main Analog Switch used by hardware.
XD_ERROR	Indicates the condition of calibration process according to: { 16, "Default value set"}, {22, "Applied process out of range"}, {26, "Invalid configuration for request"}, {27, "Excess correction"}, {28, "Calibration failed"}
MAIN_BOARD_SN	The electronic main board serial number.
EEPROM_FLAG	This parameter is used to indicate EEPROM saving process. { 0, "False"}, { 1, "True"}
ORDERING_CODE	Indicates information about the sensor and control of factory production.

Transducer Block Parameter Attribute Table

Relative Index	Parameter Name	Object Type	Data Type	Store	Size	Access	Parameter usage/ Type of Transport	Default	Mandatory/ Optional (Class)
9	ACT_STROKE_TIME_DEC	Simple	Float	S	4	r	C/a	-	
10	ACT_STROKE_TIME_INC	Simple	Float	S	4	r	C/a	-	
17	TAB_ENTRY	1)	1)	1)	1)	1)	1)	-	
18	TAB_X_Y_VALUE	1)	1)	1)	1)	1)	1)	-	
19	TAB_MIN_NUMBER	1)	1)	1)	1)	1)	1)	-	
20	TAB_MAX_NUMBER	1)	1)	1)	1)	1)	1)	-	
21	TAB_ACTUAL_NUMBER	1)	1)	1)	1)	1)	1)	-	
22	DEADBAND	Simple	Float	S	4	r,w	C/a	-	
23	DEVICE_CALIB_DATE	Simple	Octet String	S	16	r,w	C/a	-	
24	DEVICE_CONFIG_DATE	Simple	Octet String	S	16	r,w	C/a	-	
25	LIN_TYPE	1)	1)	1)	1)	1)	1)	0	
32	RATED_TRAVEL	Simple	Float	S	4	r,w	C/a	-	

Relative Index	Parameter Name	Object Type	Data Type	Store	Size	Access	Parameter usage/ Type of Transport	Default	Mandatory/ Optional (Class)
33	SELF_CALIB_CMD	Simple	Unsigned8	S	1	r,w	C/a	0	
34	SELF_CALIB_STATUS	Simple	Unsigned8	N	1	r	C/a	0	
35	SERVO_GAIN_1	Simple	Float	S	4	r,w	C/a	-	
36	SERVO_RATE_1	Simple	Float	S	4	r,w	C/a	-	
37	SERVO_RESET_1	Simple	Float	S	4	r,w	C/a	-	
38	SETP_CUTOFF_DEC	Simple	Float	S	4	r,w	C/a	-	
39	SETP_CUTOFF_INC	Simple	Float	S	4	r,w	C/a	-	
45	TOTAL_VALVE_TRAVEL	Simple	Float	D[2)]	4	r	C/a	-	
46	TOT_VALVE_TRAV_LIM	Simple	Float	S	4	r,w	C/a	-	
47	TRAVEL_LIMIT_LOW	Simple	Float	S	4	r,w	C/a	0	
48	TRAVEL_LIMIT_UP	Simple	Float	S	4	r,w	C/a	100	
49	TRAVEL_RATE_DEC	Simple	Float	S	4	r,w	C/a	-	
50	TRAVEL_RATE_INC	Simple	Float	S	4	r,w	C/a	-	
51	VALVE_MAINT_DATE	Simple	Octet String	S	16	r,w	C/a	-	
52	SERVO_GAIN_2	Simple	Float	S	4	r,w	C/a	-	
53	SERVO_RATE_2	Simple	Float	S	4	r,w	C/a	-	
54	SERVO_RESET_2	Simple	Float	S	4	r,w	C/a	-	
55	TAB_OP_CODE	1)	1)	1)	1)	1)	1)	-	
56	TAB_STATUS	1)	1)	1)	1)	1)	1)	-	
57	POSITIONING_VALUE	Record	DS_33	D	5	r	C/a	-	
58	FEEDBACK_VALUE	Record	DS_33	D	5	r	C/a	-	
59	VALVE_MAN	Simple	OctetString	S	16	r,w	C/a	-	
60	ACTUATOR_MAN	Simple	OctetString	S	16	r,w	C/a	-	
61	VALVE_TYPE	Simple	Unsigned8	S	1	r,w	C/a	-	
62	ACTUATOR_TYPE	Simple	Unsigned8	N	1	r	C/a	-	
63	ACTUATOR_ACTION	Simple	Unsigned8	S	1	r,w	C/a	-	
64	VALVE_SER_NUM	Simple	OctetString	S	16	r,w	C/a	-	
65	ACTUATOR_SER_NUM	Simple	OctetString	S	16	r,w	C/a	-	
66	ADD_GEAR_SER_NUM	Simple	OctetString	S	16	r,w	C/a	-	
67	ADD_GEAR_MAN	Simple	OctetString	S	16	r,w	C/a	-	
68	ADD_GEAR_ID	Simple	OctetString	S	16	r,w	C/a	-	
69	ADD_GEAR_INST_DATE	Simple	OctetString	S	16	r,w	C/a	-	
70	AIR_TO	Simple	Unsigned8	N	1	r,w	C/a	Open	
71	CAL_POINT_HI	Simple	Float	N	4	r,w	C/a	%	
72	CAL_POINT_LO	Simple	Float	N	4	r	C/a	%	
73	CAL_MIN_SPAN	Simple	Float	N	4	r	C/a	1	
74	CAL_UNIT	Simple	Unsigned16	N	2	r	C/a	%	
75	FEEDBACK_CAL	Simple	Float	N	4	r,w	C/a	%	
76	CAL_CONTROL	Simple	Unsigned8	N	1	r,w	C/a	Disable	
77	BACKUP_RESTORE	Simple	Unsigned8	S	1	r,w	C/a	None	
78	SECONDARY_VALUE	Record	DS-33	D	5	r	C/a		
79	SECONDARY_VALUE_UNIT	Simple	Unsigned16	N	2	r	C/a	Celsius	
80	CAL_TEMPERATURE	Simple	Float	N	4	r,w	C/a	Celsius	
81	SERVO_PID_BYPASS	Simple	Unsigned8	S	1	r,w	C/a	Not	

Relative Index	Parameter Name	Object Type	Data Type	Store	Size	Access	Parameter usage/ Type of Transport	Default	Mandatory/ Optional (Class)
								Bypass	
82	SERVO_PID_ERROR_PER	Record	DS-33	D	5	r	C/a		
83	SERVO_PID_INTEGRAL_PER	Record	DS-33	D	5	r	C/a		
84	SERVO_MV_PER	Record	DS-33	D	5	r	C/a		
85	MODULE_SN	Simple	Unsigned32	S	4	r,w	C/a		
86	REVERSALS	simple	float	S	4	r,w	C/a		
87	STROKES	simple	float	S	4	r,w	C/a		
88	AVERAGE_VELOCITY	simple	float	D	4	r	C/a		
89	INSTANTANEOUS_VELOCITY	simple	float	D	4	r	C/a		
90	TIME_CLOSING	simple	float	D	4	r	C/a		
91	TIME_OPENING	simple	float	D	4	r	C/a		
92	MAX_RANGE_VALVE	simple	float	S	4	r,w	C/a		
93	HIGHEST_TEMPERATURE	simple	float	S	4	r,w	C/a		
94	LOWEST_TEMPERATURE	simple	float	S	4	r,w	C/a		
95	DIAGNOSES_STATUS	simple	Unsigned8	N	1	r	C/a	None	
96	DIGITAL_HALL_VALUE	Record	DS-33	D	5	r	C/a		
97	HALL_COMPENSATED	simple	float	D	4	r	C/a		
98	HALL_OFFSET_CONTROL	simple	Unsigned8	N	1	r,w	C/a	Disable	
99	READ_HALL_CAL_POINT_HI	simple	float	S	4	r	C/a		
100	READ_HALL_CAL_POINT_LO	simple	float	S	4	r	C/a		
101	DA_OUTPUT_VALUE	Record	DS-33	D	5	r	C/a		
102	USER_DA_CAL_POINT_HI	simple	float	S	4	r	C/a		
103	USER_DA_CAL_POINT_LO	simple	float	S	4	r	C/a		
104	PIEZO_ANALOG_VOLTAGE	Record	DS-33	D	5	r	C/a		
105	POT_DC	simple	Unsigned8	N	1	r,w	C/a	128	
106	MAIN_LATCH	simple	Unsigned8	S	1	r,w	C/a	12	
107	XD_ERROR	simple	Unsigned8	S	1	r	C/a	0x10	
108	MAIN_BOARD_SN	simple	Unsigned32	S	4	r,w	C/a		
109	EEPROM_FLAG	simple	Uunsigned8	D	1	r	C/a		
110	ORDERING_CODE	array	Unsigned8	S	50	r,w	C/a		

1) see table handling
2) should be stored non volatile

***Table 3.2**. Parameter attributes of Transducer Block*

Transducer Block View Object table

Relative Index	Parameter Name	VIEW_1 Number of bytes
9	ACT_STROKE_TIME_DEC	
10	ACT_STROKE_TIME_INC	
17	TAB_ENTRY	
18	TAB_X_Y_VALUE	
19	TAB_MIN_NUMBER	
20	TAB_MAX_NUMBER	
21	TAB_ACTUAL_NUMBER	
22	DEADBAND	

Relative Index	Parameter Name	VIEW_1 Number of bytes
23	DEVICE_CALIB_DATE	
24	DEVICE_CONFIG_DATE	
25	LIN_TYPE	
32	RATED_TRAVEL	
33	SELF_CALIB_CMD	
34	SELF_CALIB_STATUS	
35	SERVO_GAIN_1	
36	SERVO_RATE_1	
37	SERVO_RESET_1	
38	SETP_CUTOFF_DEC	
39	SETP_CUTOFF_INC	
45	TOTAL_VALVE_TRAVEL	
46	TOT_VALVE_TRAV_LIM	
47	TRAVEL_LIMIT_LOW	
48	TRAVEL_LIMIT_UP	
49	TRAVEL_RATE_DEC	
50	TRAVEL_RATE_INC	
51	VALVE_MAINT_DATE	
52	SERVO_GAIN_2	
53	SERVO_RATE_2	
54	SERVO_RESET_2	
55	TAB_OP_CODE	
56	TAB_STATUS	
57	POSITIONING_VALUE	
58	FEEDBACK_VALUE	
59	VALVE_MAN	
60	ACTUATOR_MAN	
61	VALVE_TYPE	
62	ACTUATOR_TYPE	
63	ACTUATOR_ACTION	
64	VALVE_SER_NUM	
65	ACTUATOR_SER_NUM	
66	ADD_GEAR_SER_NUM	
67	ADD_GEAR_MAN	
68	ADD_GEAR_ID	
69	ADD_GEAR_INST_DATE	
70	AIR_TO	
71	CAL_POINT_HI	
72	CAL_POINT_LO	
73	CAL_MIN_SPAN	
74	CAL_UNIT	
75	FEEDBACK_CAL	
76	CAL_CONTROL	
77	BACKUP_RESTORE	
78	SECONDARY_VALUE	
79	SECONDARY_VALUE_UNIT	
80	CAL_TEMPERATURE	

Relative Index	Parameter Name	VIEW_1 Number of bytes
81	SERVO_PID_BYPASS	
82	SERVO_PID_ERROR_PER	
83	SERVO_PID_INTEGRAL_PER	
84	SERVO_MV_PER	
85	MODULE_SN	
86	REVERSALS	
87	STROKES	
88	AVERAGE_VELOCITY	
89	INSTANTANEOUS_VELOCITY	
90	TIME_CLOSING	
91	TIME_OPENING	
92	MAX_RANGE_VALVE	
93	HIGHEST_TEMPERATURE	
94	LOWEST_TEMPERATURE	
95	DIAGNOSES_STATUS	
96	DIGITAL_HALL_VALUE	
97	HALL_COMPESATED	
98	HALL_OFFSET_CONTROL	
99	READ_HALL_CAL_POINT_HI	
100	READ_HALL_CAL_POINT_LO	
101	DA_OUTPUT_VALUE	
102	USER_DA_CAL_POINT_HI	
103	USER_DA_CAL_POINT_LO	
104	PIEZO_ANALOG_VOLTAGE	
105	POT_DC	
106	MAIN_LATCH	
107	XD_ERROR	
108	MAIN_BOARD_SN	
109	EEPROM_FLAG	
110	ORDERING_CODE	
	Total length of View Object	13

Table 2. View Object table Transducer Block

The **Simatic PDM** (Process Device Manager) configuration software from Siemens, for example, can configure many parameters of the Input Transducer block.

The device was created as SP303.

Here, you can see all blocks instantiated.

As you can see the Transducer and Display are treated as special type of Function Blocks, called Transducer Blocks.

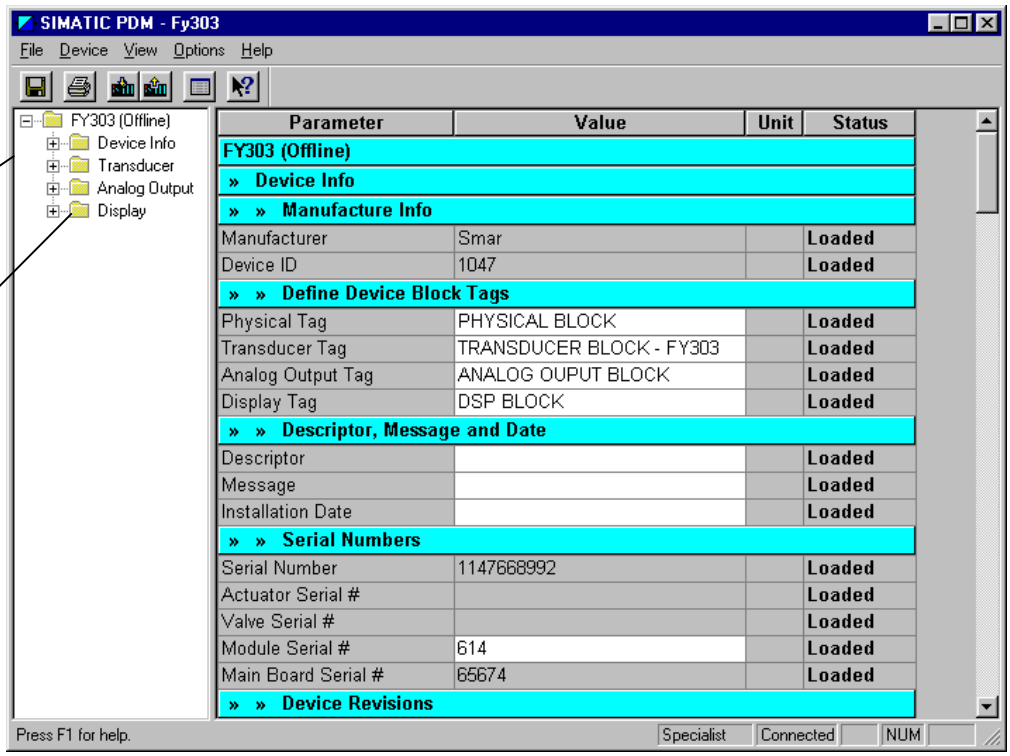

Figure 3.1 - Function and Transducer Blocks

To make the configuration of Transducer Block, we need to select the menu "Device"
Use this menu:
- To change the device address;
- To make the up/download of parameters;
- To configure the Transducer Block, Analog Output Block and Display Block;
- To calibrate the positioner;
- To make the reset by software, to protect the device against writing and to simulate the value from transducer block to analog output block;

To save and restore data calibration.

To make the configuration of Transducer Block, we need to select the menu "Device- OffLine Configuration-Transducer:

The user can select the valve linearization type: linear, user defined(table), EP25, EP33, EP50,Q24,Q22, EQ50.

The user can select the valve type.

The actuator Fail action can be : Opening(100%), Closing(0%), not initialized or None

Te user can set air to open or air to close according to the action.

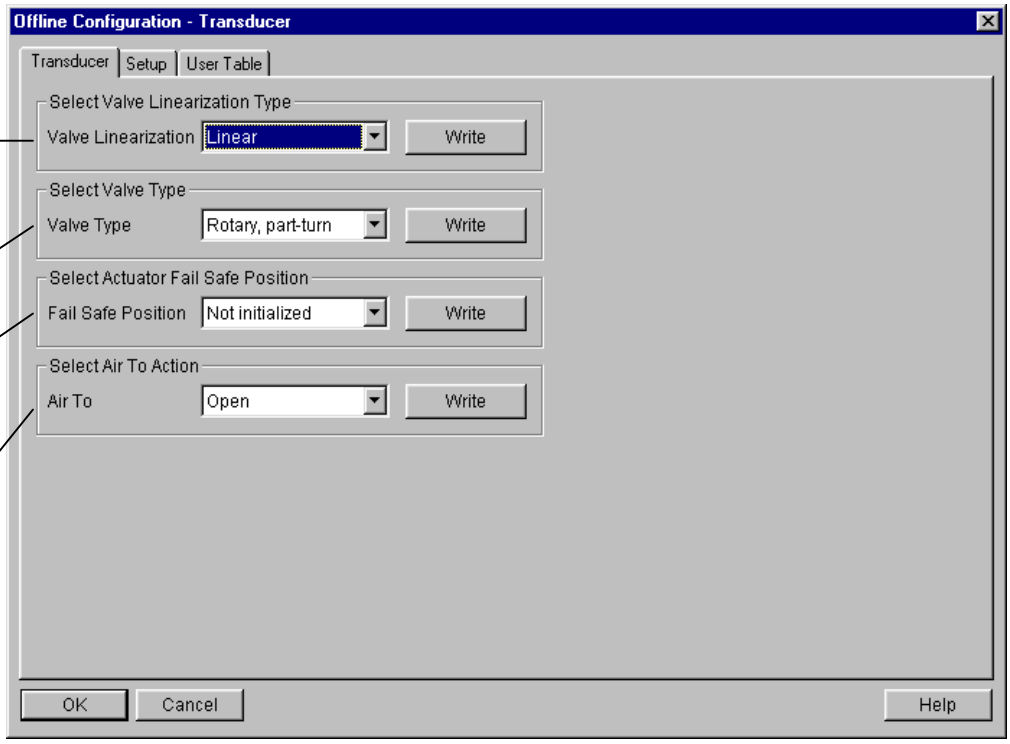

Figure 3.2 - Offline Configuration - Transducer

Selecting the page Setup, the user configures some data for the internal servo PID of SP303.

Configurable seconds to full span change (closing time of the valve) in seconds and Configurable seconds to full span change (opening time of the valve) in seconds.

Servo Control Parameters:
The gain and reset depend on valve type.

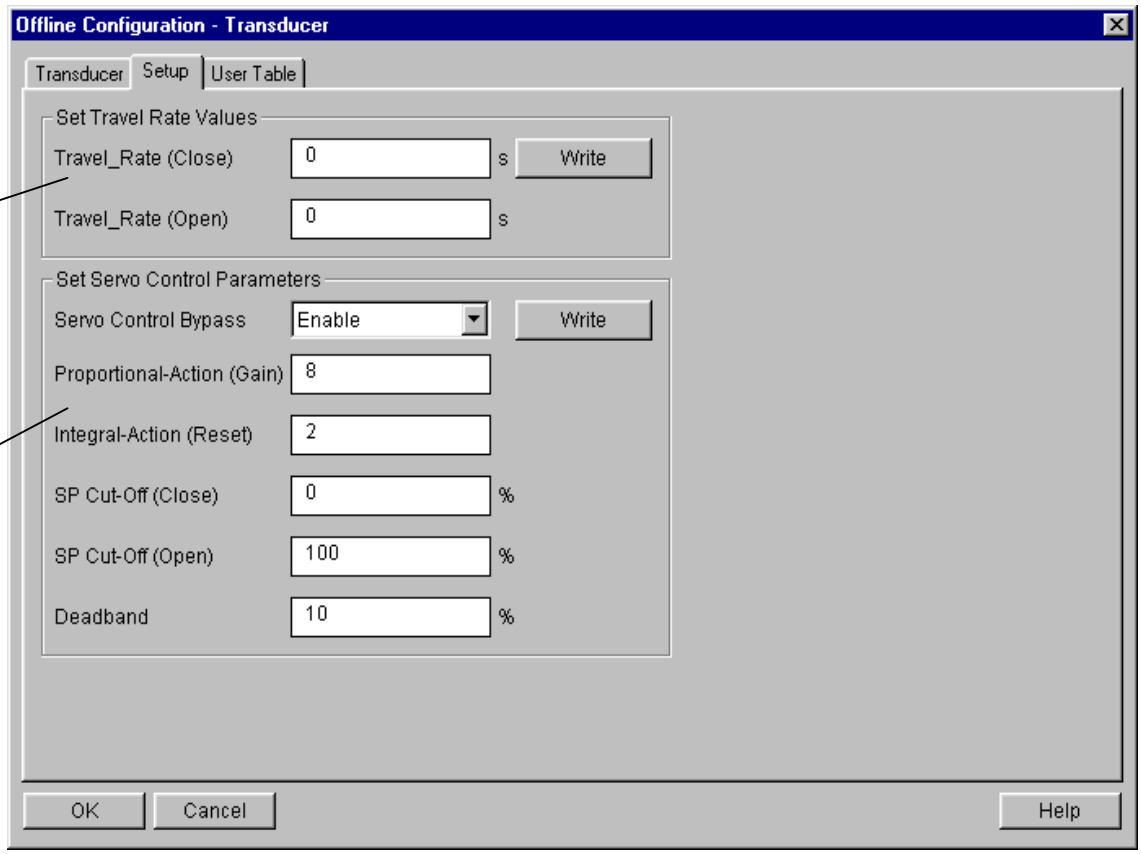

Figure 3.3 - Simatic PDM - Transducer Configuration Setup

Table handling

There is the possibility to load and re-load tables in the devices. This table is used for linearisation mostly. For this procedure the following parameters are necessary:
TAB_INDEX
TAB_X_Y_VALUE
TAB_MIN_NUMBER
TAB_MAX_NUMBER
TAB_OP_CODE
TAB_STATUS
The TAB_X_Y_VALUE parameter contains the value couple of the each table entries.

To make the configuration of Transducer Block, we need to select the menu "Device- OffLine Configuration-Transducer:The TAB_INDEX parameter identifies which element of the table is in the X_Y_VALUE parameter currently (see the following figure).

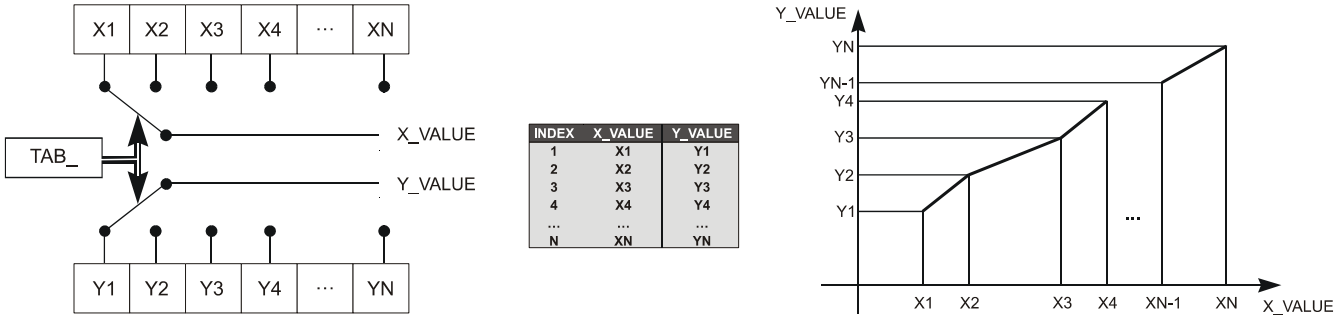

Figure 3.4 - Parameters of a table

TAB_MAX_NUMBER is the maximum size of the table in the device. TAB_MIN_NUMBER is the minimum size of the table in the device.

The modification of a table in the device influences the measurement algorithms of the device. Therefore an indication of a starting and an endpoint is necessary. The TAB_OP_CODE controls the transaction of the table. The device provides a plausibility check. The result of this check is indicated in the TAB_STATUS parameter.

The User Table is used to make the position characterization in several points.
The user can configure up to 21 points in percentage.
The valve characteristic curve may be slightly nonlinear.
This eventual non-linearity may be corrected through the User Table.

The user just needs to configure the input values and the correspondent output values in %. Configure a minimum of two points. These points will define the characterization curve. The maximum number of points is 21. It is recommended to select the points equally distributed over the desired range or over a part of the range where more accuracy is required. The user needs to set "user defined(table) to valve linearization type.

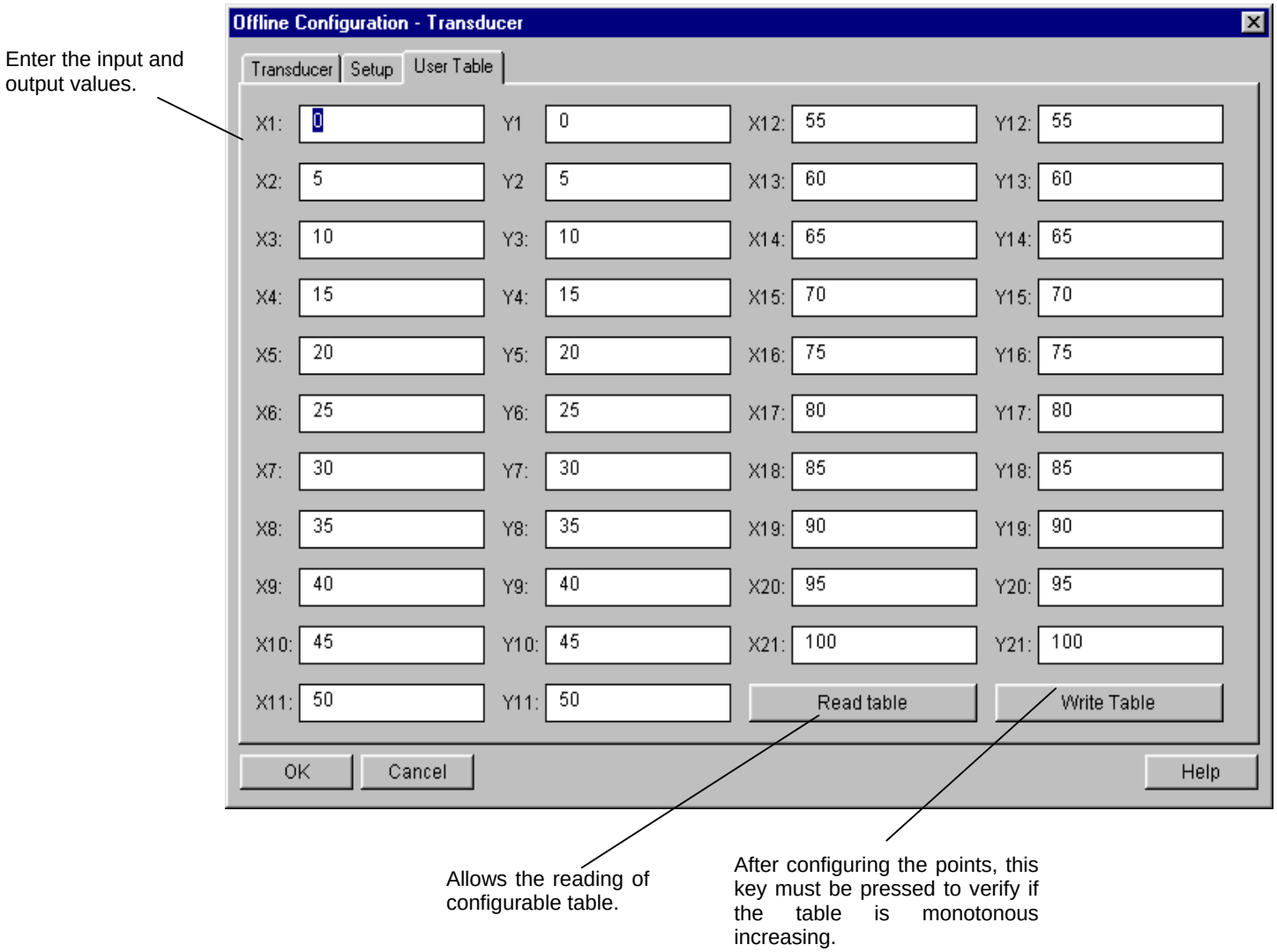

Figure 3.5 - SP303 Simatic PDM - Transducer OffLineConfiguration - User Table Screen

The desired flow characteristics may be changed using this function. E.g. If a valve with linear inherent flow characteristic is used and equal percentage applied flow characteristic is selected, the valve will be act as an equal percentage valve.

The adjacent number is the rangeability of the valve. The rangeability of the valve may be found in the manufacturer's documentation. The options for applied flow characterization are: **LINEAR, TABLE , EP25, EP33, EP50, QO25, QO33, QO50**

The equation resulting from its curve is:

Y(%)= (X/(((X(%)./100)*(1-L))+L)),

Where:

Y[%] = Value after the flow characterization curve calculation and X[%] = Position value before entering in the curve calculation.

L = Characterization Factor

TIPO	L
LINEAR	1.0
EP25	3.5
EP33	4.1
EP50	5.1
QO25	0.27
QO33	0.24
QO50	0.19

How to configure the Analog Output Block

The AO block provides a value to an output transducer block. It provides value, scaling conversion, fail safe mechanism and other features.
The Analog Output Block is a function block used by devices that work as output elements in a control loop, like valves, actuators, positioners, etc. The AO block receives a signal from another function block and passes its results to an output transducer block through an internal channel reference.

The user can set the operation mode.

The user needs to set both channel to tansducer.

The user can set Opening or Closing fot the actuator action.

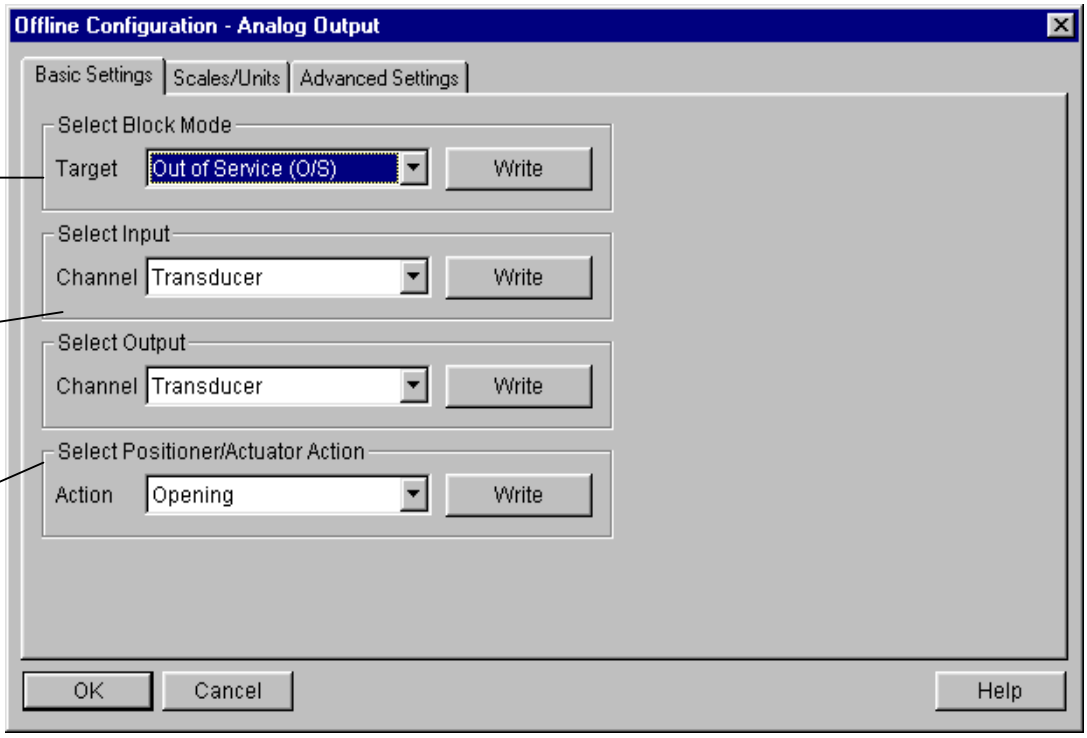

Figure 3.6 - SP303 Simatic PDM - Analog Output Block - Basic Settings - Offline Configuration

Selecting the page Scale/Units, the user has the option to configure the scale and unit for the input and output:

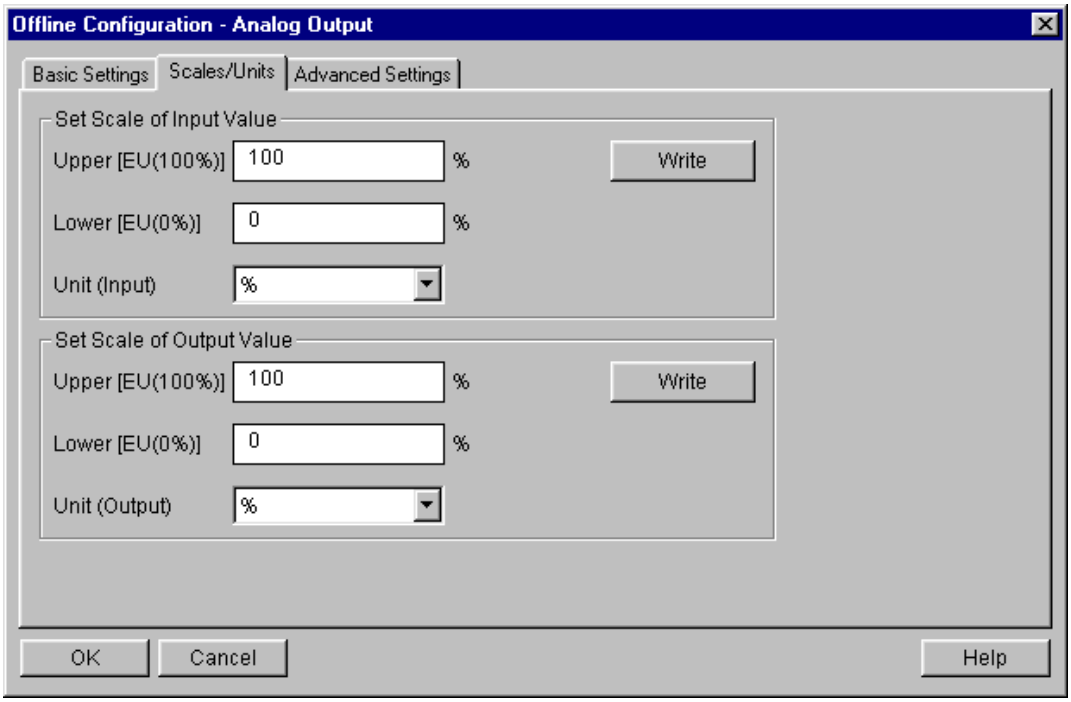

Figure 3.7 - SP303 Simatic PDM - Analog Output Block - Scale/Units - Offline Configuration

The unit and scale for the output will be the same for the transducer block. Note that the allowed units are %, rad, °, mm.

Selecting Advanced Settings page, the user can set the fail safe conditions.

For Fail Safe mode the options can be: Actuator goes to fail-safe position, storing last valid setpoint and fail safe value is used as a control regulator input.

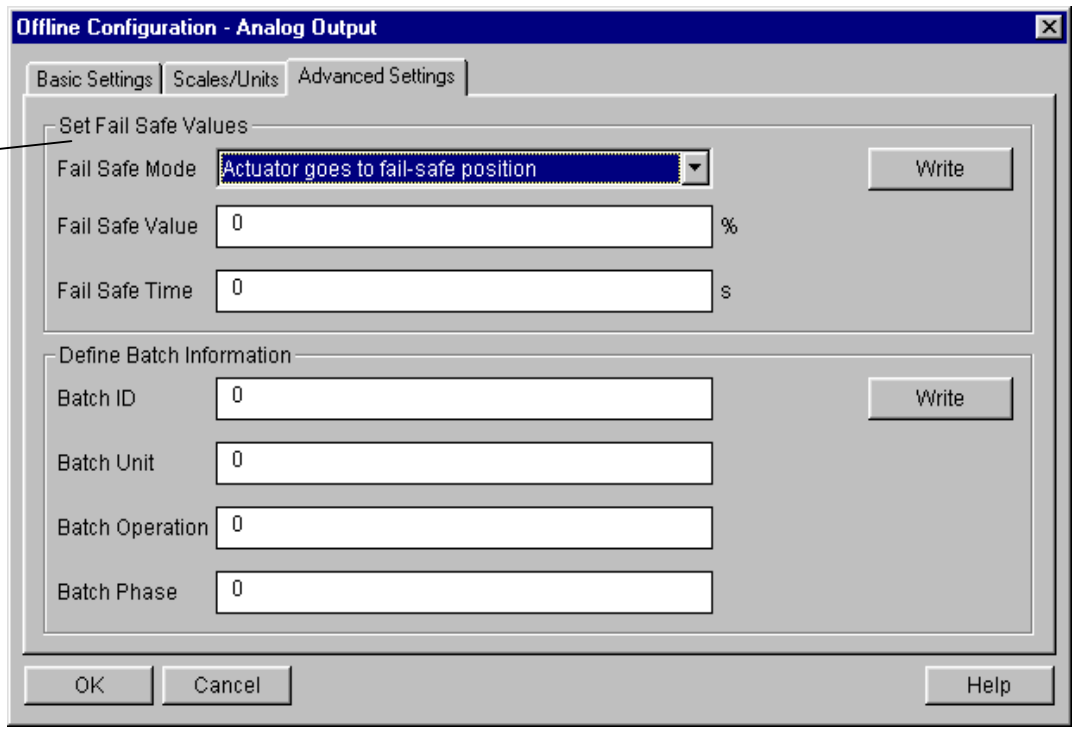

Figure 3.8 - SP303 Simatic PDM - Analog Output Block - Advanced Settings - Offline Configuration

In terms of Online configuration, the user can select at the device menu the Online Configuraiton for Analog Output block:

The user can set the block mode operation.

According to the block mode, the user can set the setpoint.

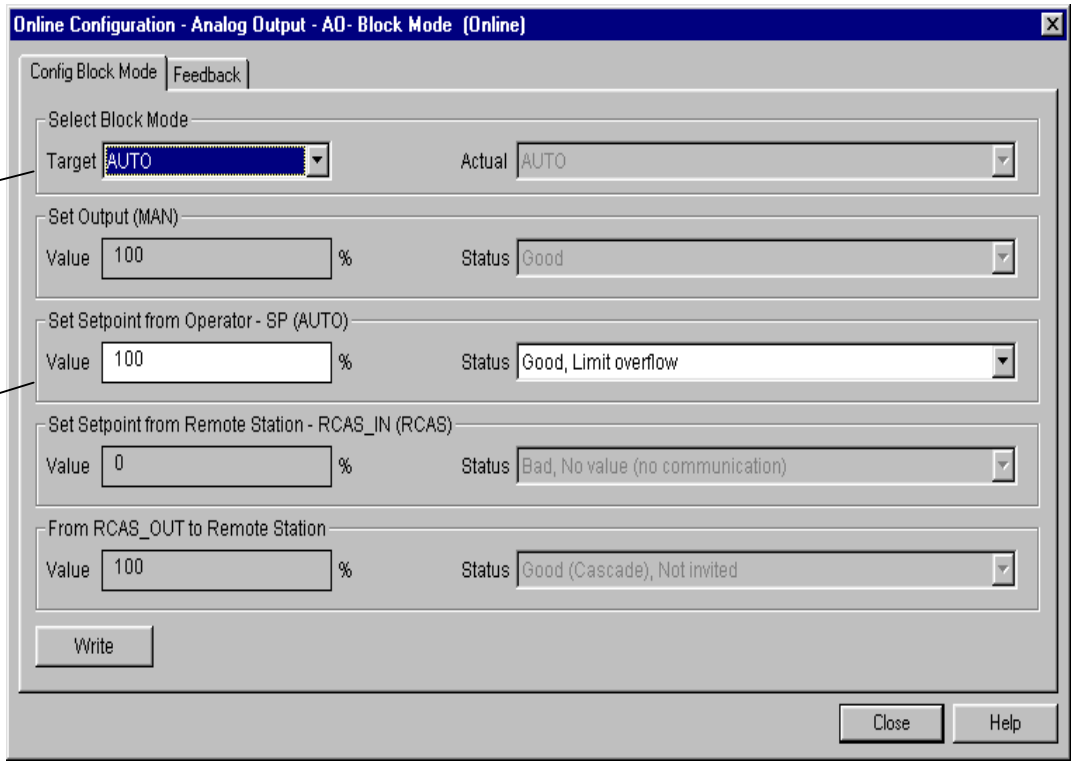

Figure 3.9 - SP303 Simatic PDM - OnLine Configuration mode block for AO.

Using Feedback page, the user can monitore and check all values related between the analog block and the transducer block:

Information about the real condition of transducer and analog output block.

Check back and alarm condition.

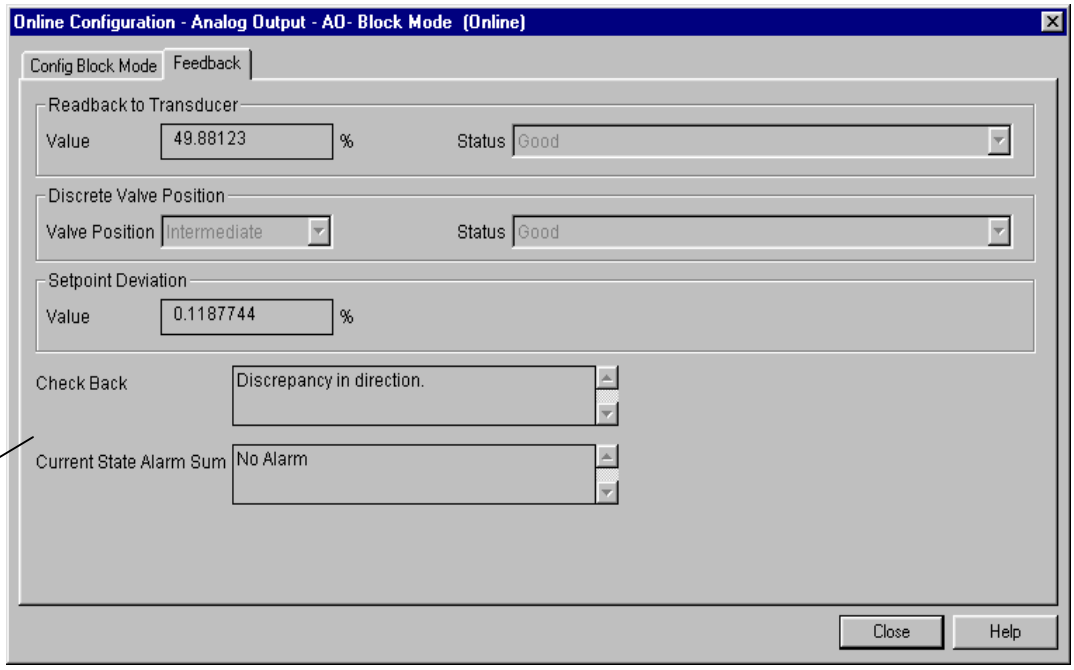

Figure 3.10 - SP303 Simatic PDM - OnLine Configuration feedback for AO.

Position Calibration

First of all the user should configure the valve type, the servo gain according to the valve. Please, see transducer offline configuration. In general, when the valve is fast, is appropiate to set a gain value about 8. If the valve is slow, is appropiate to set a gain value about 43.It depends on case by case and the valve type.
Then using the Device menu, the user must select Calibration, where we have the options: "Lower/Upper", "Sef-Calibration" and "Temperature".
Chosing "Lower/Upper" the user has the window:

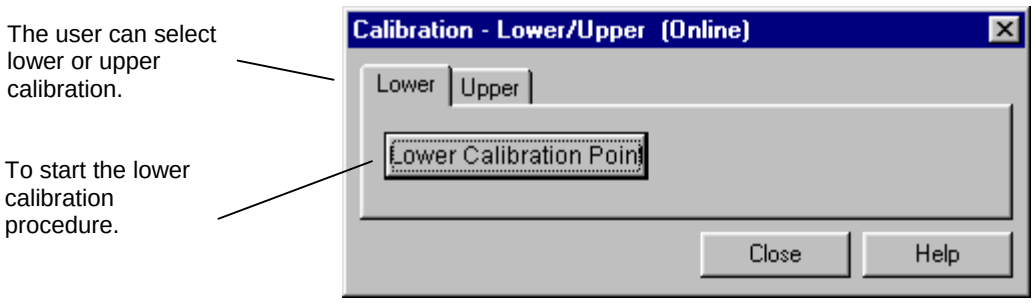

Figure 3.11 - SP303 - Simatic PDM Calibration Lower/Upper

After pressing "Lower Calibration Point", we get a warning:

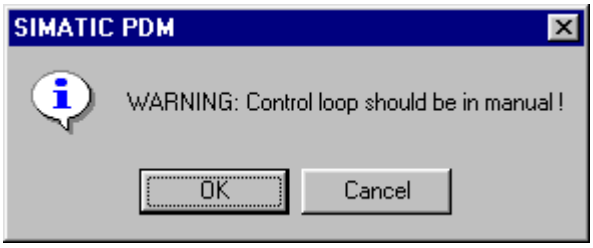

If the user proceeds, the valve position goes to the lower position and we have the message:

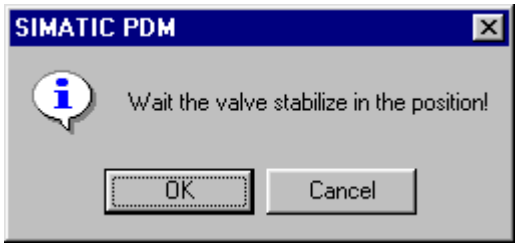

If the valve is stabilized, when the user press "OK", we have a new window that allows him to enter the desired value for the new calibrated point for the lower position. Write 0% in new value. For **SP303** it should be always 0%:

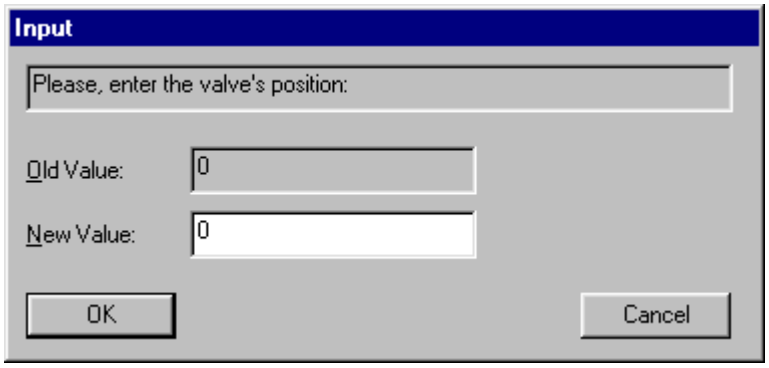

After entering the desired valve, the position is corrected according to the desired value and the user can make the correction until the right posiiton is reached:

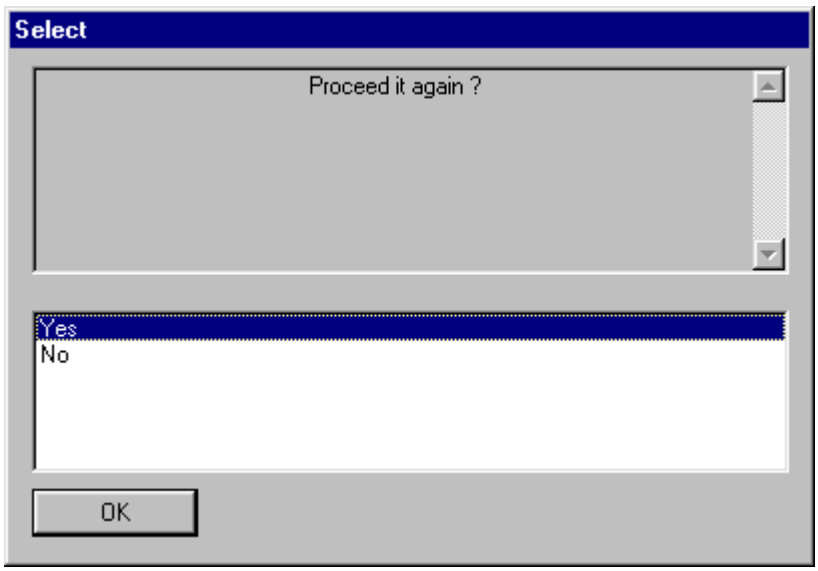

If the calibrated position is correct, press "No" and a new warning appears:

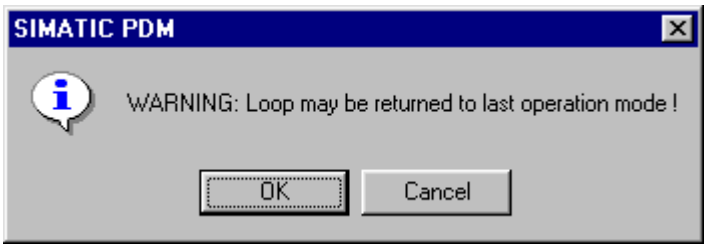

After user confirmation, the positioner comes to the normal operation.

The upper calibration procedure is similar than the lower:

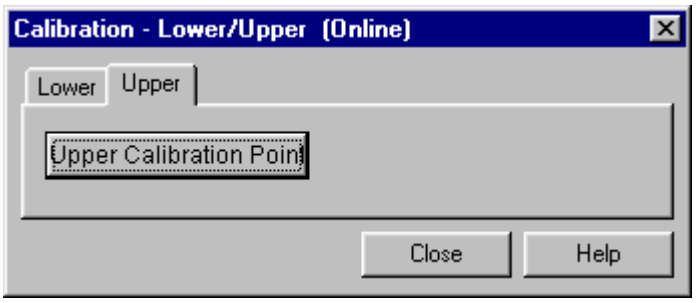

After pressing "Upper Calibration Point", we get a warning:

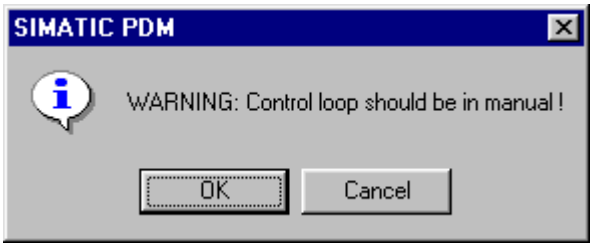

If the user proceeds, the valve position goes to the upper position and we have the message:

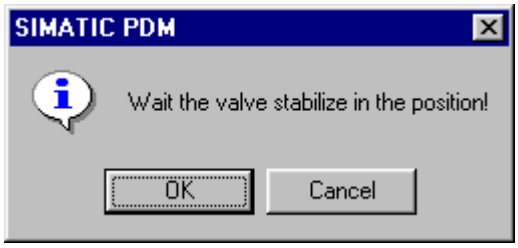

If the valve is stabilized, when the user press "OK", we have a new window that allows him to enter the desired value for the new calibrated point for the upper position. Write 100% in new value. For **SP303** it should be always 100%::

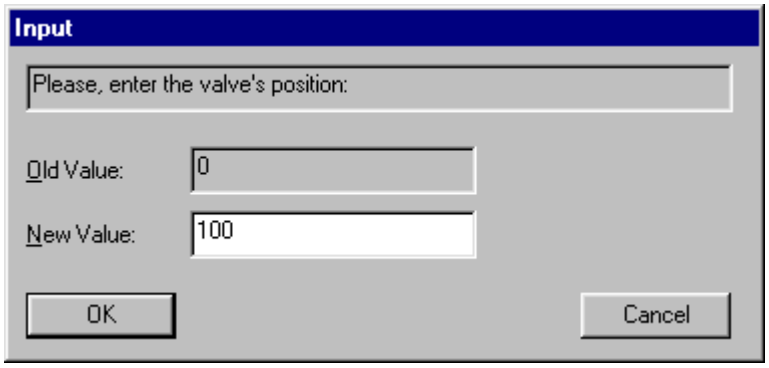

After entering the desired valve, the position is corrected according to the desired value and the user can make the correction until the right posiiton is reached:

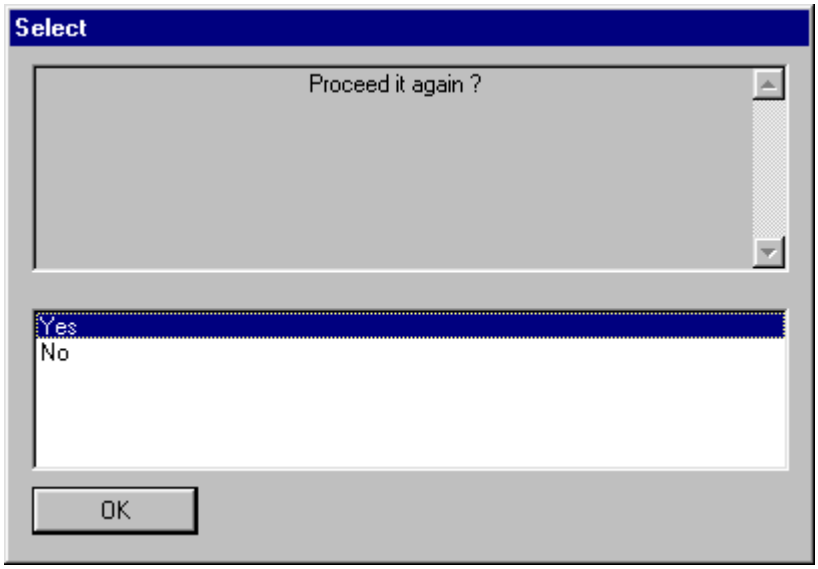

If the calibrated position is correct, press "No" and a new warning appears:

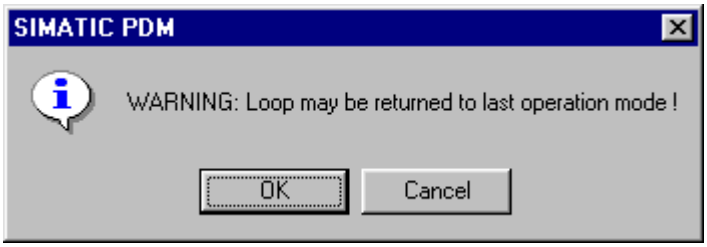

After user confirmation, the positioner comes to the normal operation.

NOTE

The calibration unit is always percentage (%).

It is also recommendable, before a new calibration, to save the existing trim data by means of parameter BACKUP_RESTORE, using the option "Last Cal Backup",

Temperature Calibration

The parameter CAL_TEMPERATURE can be used to trim the temperature sensor located at the body of positioner in order to improve the accuracy of temperature measurement done by its sensor. The range accepts from -40°C to +85 °C. The parameter SECONDARY_VALUE indicates the value of such measurement.
Using the Simatic PDM, go to the Device menu and selct the "Calibration" menu and then "Temperature:

The user can set the desired calibration temperature point .

Here, the final calibrated tempearture can be checked.

The user can check the operation result.

To calibrate, press the key "write".

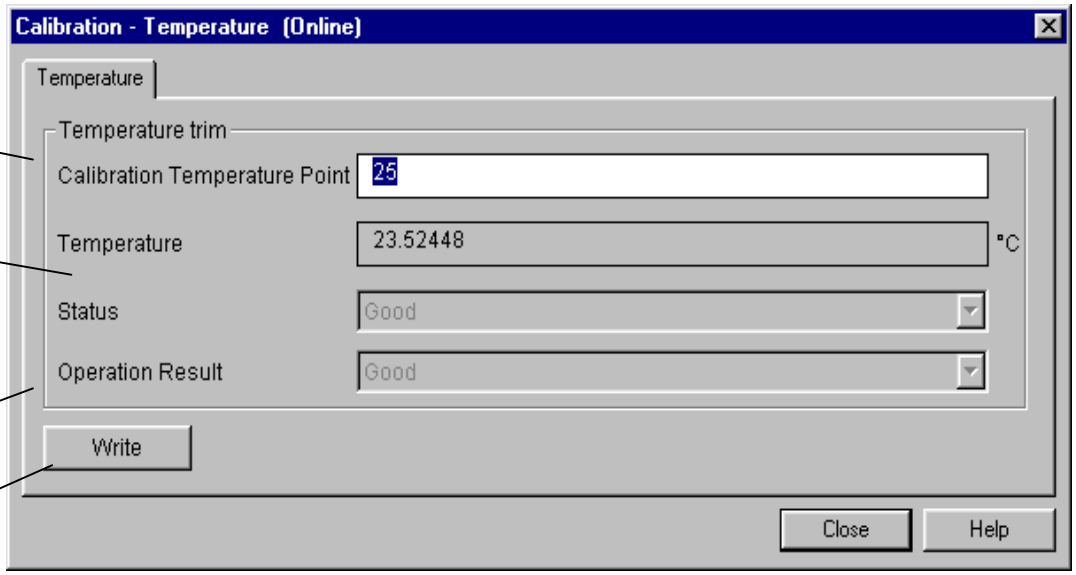

Figure 3.12 - SP303 Temperature Calibration

Self-Calibration

Using the "Self-Calibration" procedure, the user starts a method of self-calibration for the Positioner. For this reason, the option "Start self calibration/Initialization" should be selected at the window below. The self-calibration can take some minutes according to the valve:

In normal operation, we have this option indicating no reaction of the field device according to the self-calibration procedure.

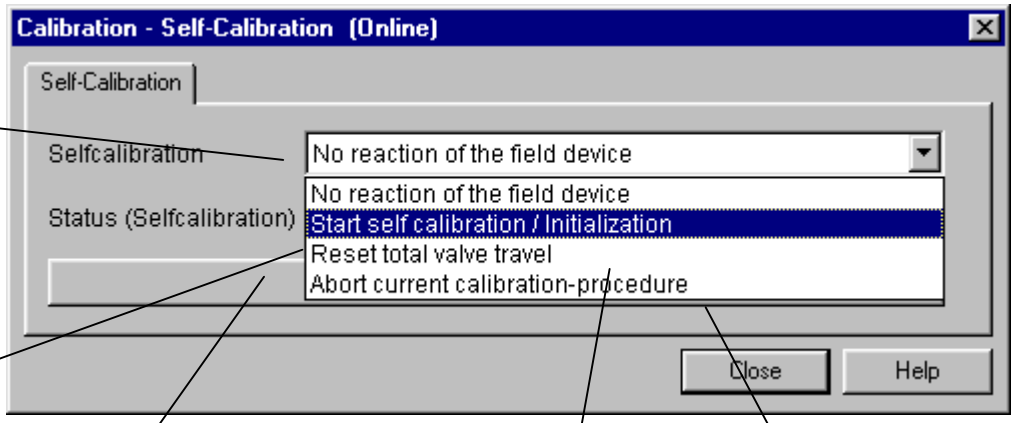

This marked option allows the start of self-calibration procedure.

After selecting the self-calibration procedure, please, press the "Write" key to begin the procedure.

To reset the total valve travel, select this option.

To abort the self-calibration procedure, select this option.

After selecting the self-calibration procedure, the positioner will move the valve during some time to setup the lower and upper position automaticly. At LCD interface, the user can see the steps of this procedure in %.

If the procedure gets success we got the following status of "Self Calibration OK.":

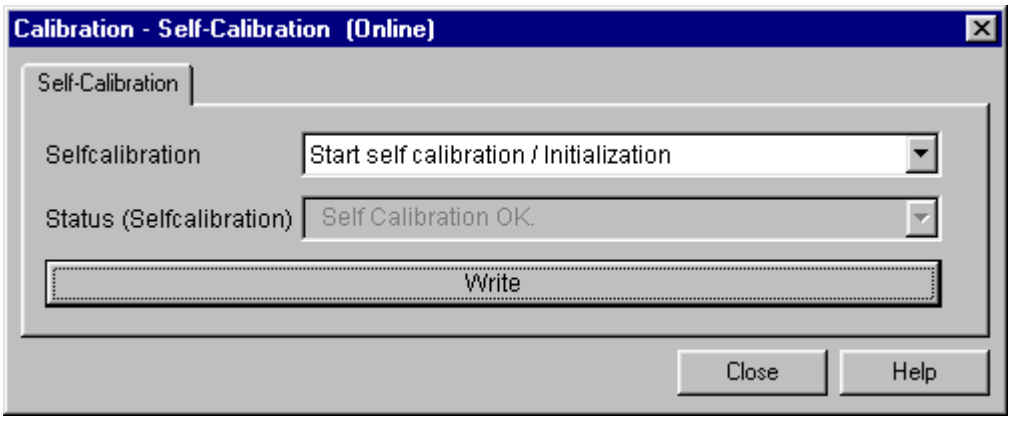

We can have the following options for the status calibration:

- "Self Calibration OK.",
- "Aborted",
- "No magnet part detected.",
- "Error in mechanical system.",
- "Timeout",
- "Pressure Problem."

To verify and check the self calibration results the user should select at the main menu the option "Maintenance Self-Calibration Report":

This value describes the set value for hardware compensation. It is a automatic calculated value. It is suitable that the user does not change this value.

The Hall sensor value and the calibrated points for it.

The value for the DA converter and the calibrated points for it.

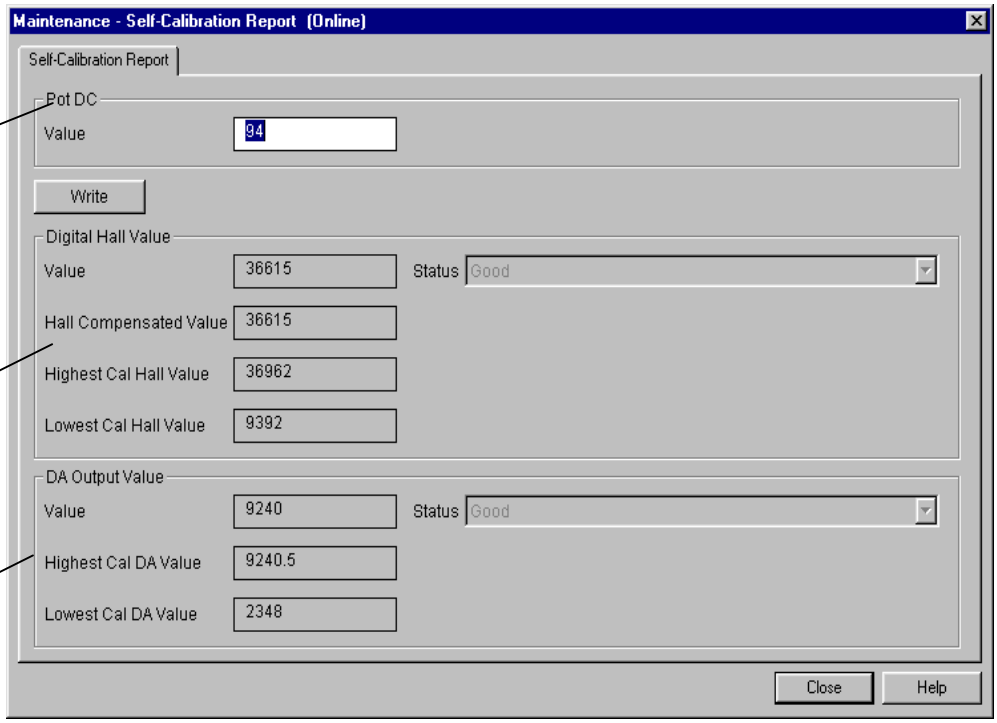

Figure 3.13 - SP303 Maintenance Self-Calibration Report

Diagnosis

Using the "View" menu and selecting "Diagnosis", the user has accessing to the diagnosis windows, according to the window below:

The user can see: the setpoint value from AO; the total valve travel according to the maximum range value for the valve; and a general status for SP303.

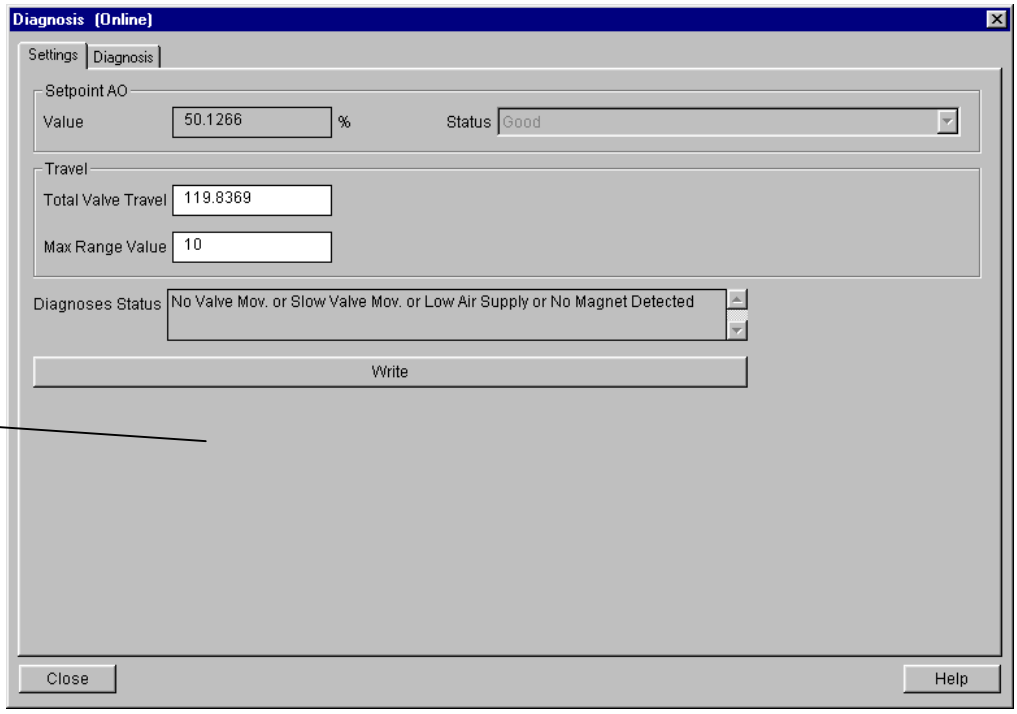

Figure 3.14 - SP303 Settings

Selecting the "Diagnosis" page, we have:

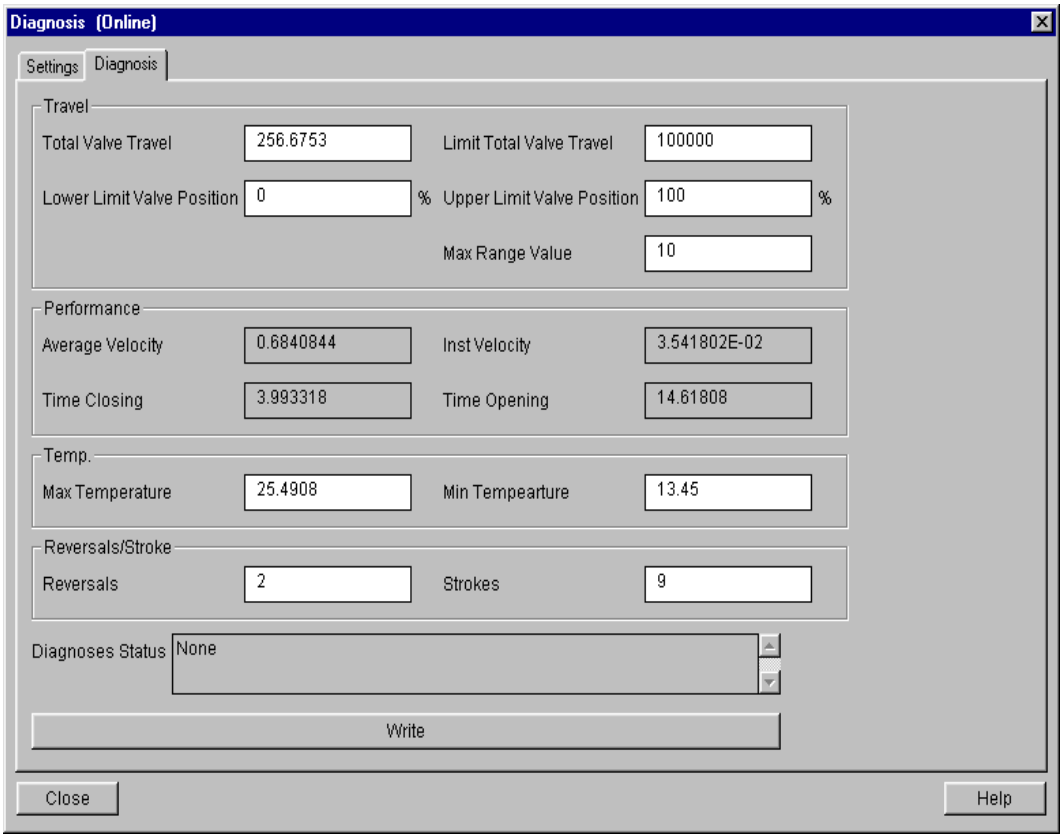

Figure 3.15 - SP303 Diagnosis

Using this window, the user can have some items for dignosing:

- Travel: according to the maximum range valve value, we have the total valve travel and a generation of traveling Limit Excedeed when this value is higher than limit total valve travel parameter;
- Performance: the user can verify the average velocity, the instantaneous velocity, the time closing (when the direction is from 100.0% to 0.0%) and the time opening (when the direction is from 0.0% to 100.0%). These times are according to the configured rate for closing and opening.
- Temp: The user can verify the maximum and minimum temperature;
- Reversasl/stroke: we have the possibility to verify both values according to the movment of valve.

Some factors are importants to the performance of movment:

- the air pressure;
- the proportional action (servo gain);
- the integral action (reset);
- the travel rate for closing and opening.

Transducer Display - Configuration

Using the **Simatic PDM or any other configuration tool** is possible to configure the Display Transducer block. As the name described it is a transducer due the interfacing of its block with the LCD hardware.

The Transducer Display is treated as a normal block by **any configuration tool**. It means, this block has some parameters and those ones can be configured according to customer's needs.

The customer can choose up to six parameters to be shown at LCD display, they can be parameters just for monitoring purpose or for acting locally in the field devices by using a magnetic tool. The seventh parameter is used to access the physical device address. The user can change this address according to his application. To access and configure the Display Block, please, go to the main menu, select "Device OnLine Configuration - Display Block":

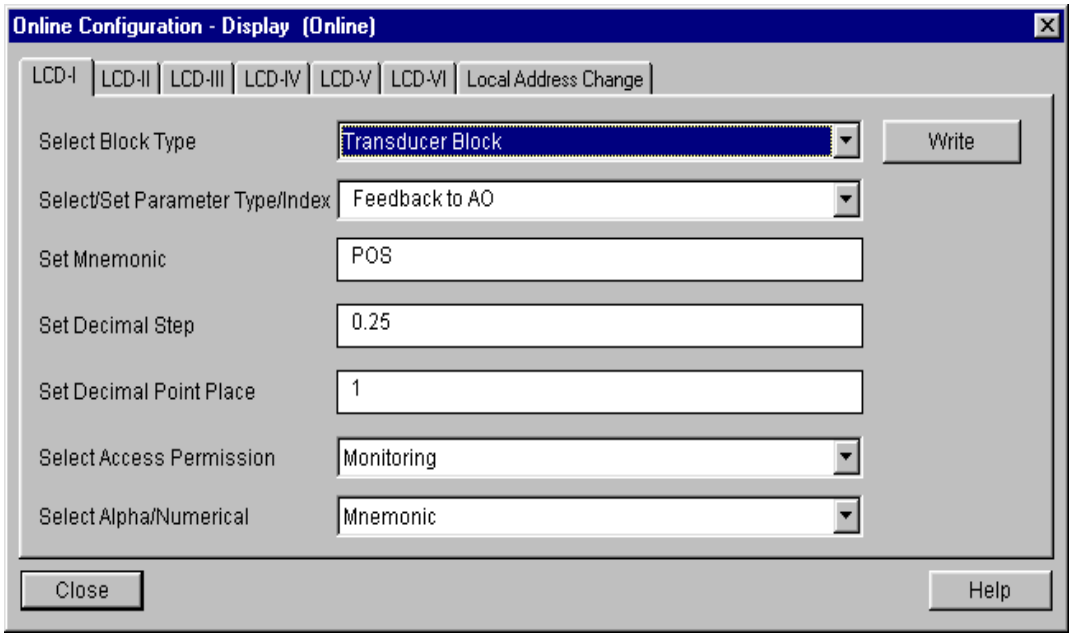

Figure 3.16 – Display Block and Simatic PDM.

Display Transducer Block

The local adjustment is completely configured by **Simatic PDM or any configuration tool**. It means, the user can select the best options to fit his application. From factory, it is configured with the options to set the Upper and Lower trim, for monitoring the input transducer output and check the Tag. Normally, the transmitter is much better configured by **Simatic PDM or configuration tool**, but the local functionality of the LCD permits an easy and fast action on certain parameters, since it does not rely on communication and network wiring connections. Among the possibilities by Local Adjustment, the following options can be emphasized: Mode block, Outputs monitoring, Tag visualization and Tuning Parameters setting.

The interface between the user is described very detailed on the "General Installation, Operation and Maintenance Procedures Manual". Please take a detailed look at this manual in the chapter related to "Programming Using Local Adjustment". It is significantly the resources on this transducer display, also all the **Series 303** field devices from SPIRAX SARCO has the same methodology to handle with it. So, since the user has learned once, he is capable to handle all kind of field devices from SPIRAX SARCO.

All function block and transducers defined according Profibus PA have a description of their features written by the Device Description Language.

This feature permits that third parties configuration tools enabled by Device Description Service technology can interpret these features and make them accessible to configure. The Function Blocks and Transducers of Series 303 have been defined rigorously according the Profibus PA specifications in order to be interoperable to other parties.

In order to able the local adjustment using the magnetic tool, it is necessary to previously prepare the parameters related with this operation via System Configuration.
There are six groups of parameters, which may be pre-configured by the user in order to able, a possible configuration by means of the local adjustment. As an example, let's suppose that you don't want to show some parameters; in this case, simply select "None" in the parameter, "Select Block Type". Doing this, the device will not take the parameters related (indexed) to its Block as a valid parameter.

Definition of Parameters and Values

Select Block Type
This is the type of the block where the parameter is located. The user can choose: Transducer Block, Analog Output Block, Physical Block or None.

Select/Set Parameter Type/Index
This is the index related to the parameter to be actuated or viewed (0, 1, 2…). For each block there are some pre-defined indexes. Refer to the Function Blocks Manual to know the desired indexes and then just enter the desired index.

Set Mnemonic
This is the mnemonic for the parameter identification (it accepts a maximum of 16 characters in the alphanumeric field of the display). Choose the mnemonic, preferably with no more than 5 characters because, this way, it will not be necessary to rotate it on the display.

Set Decimal Step
It is the increment and decrement in decimal units when the parameter is Float or Float Status value, or integer, when the parameter is in whole units.

Set Decimal Point Place.
This is the number of digits after the decimal point (0 to 3 decimal digits).

Set Access Permission
The access allows the user to read, in the case of the “Monitoring” option, and to write when "action" option is selected, then the display will show the increment and decrement arrows.

Set Alpha Numerical
These parameters include two options: value and mnemonic. In option value, it is possible to display data both in the alphanumeric and in the numeric fields; this way, in the case of a data higher than 10000, it will be shown in the alphanumeric field.

In option mnemonic, the display may show the data in the numeric field and the mnemonic in the alphanumeric field.

For devices where the software version is higher or equal to 1.10, please see the “Configuration of local adjustment using the Local Adjustment”, in the “Installation, Operation and Maintenance Procedures Manual.

In case you wish to visualize a certain tag, opt for the index relative equal to "tag". To configure other parameters just select "LCD-II" up to "LCD-VI" windows:

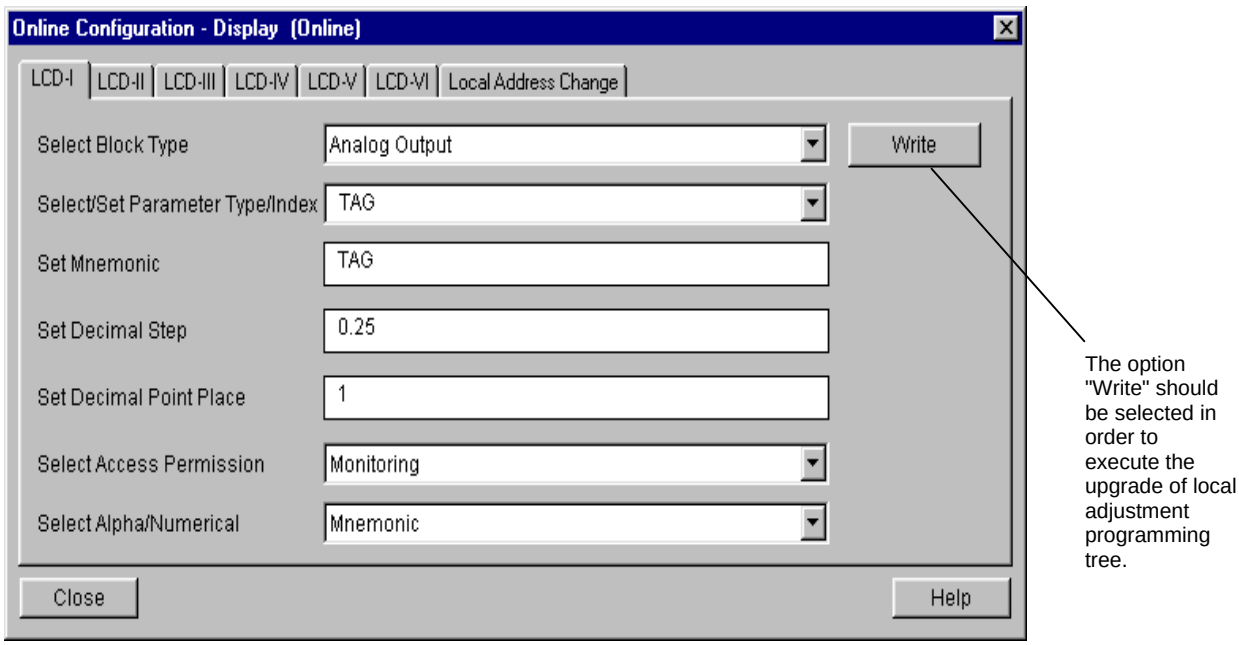

Figure 3.17 - Parameters for Local Adjustment Configuration

The window "Local Address Change" allows the user "enable/disable"access to changing the physical device address.

When the option "enable" is selected, the user can change the physical device address.

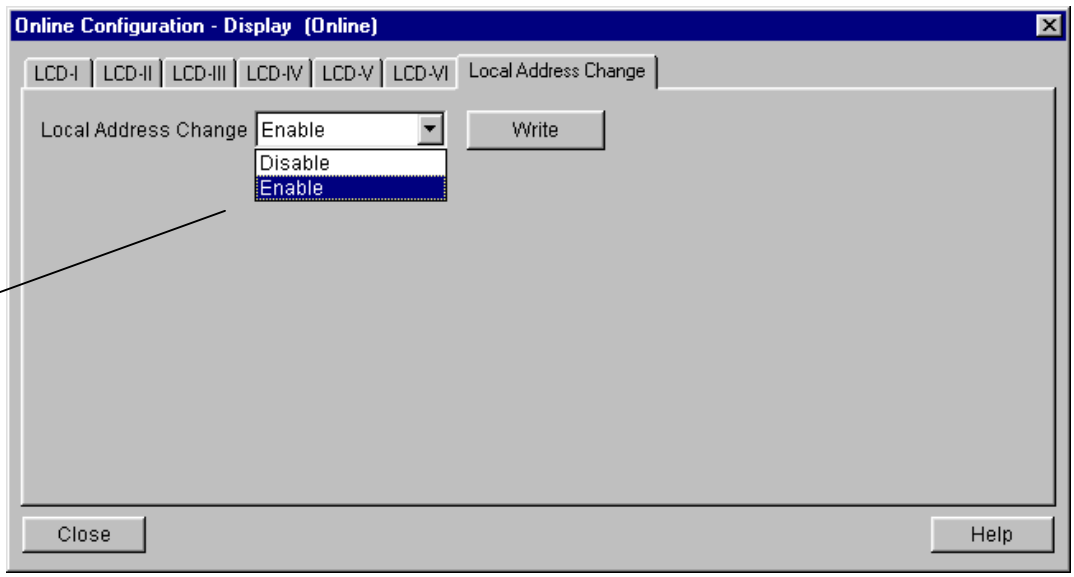

Figure 3.18 - Parameters for Local Address Configuration

When the user enter into the local adjustment and rotate the parameters using the magnetic tool, after escaping to normal operation, e.g, the monitoring, if the parameter when the magnetic tool is removed has "Access Permission equal to "monitoring", then this last parameter will be shown at the LCD.

Selecting "None", only the last chosen monitoring parameter will be shown at LCD.

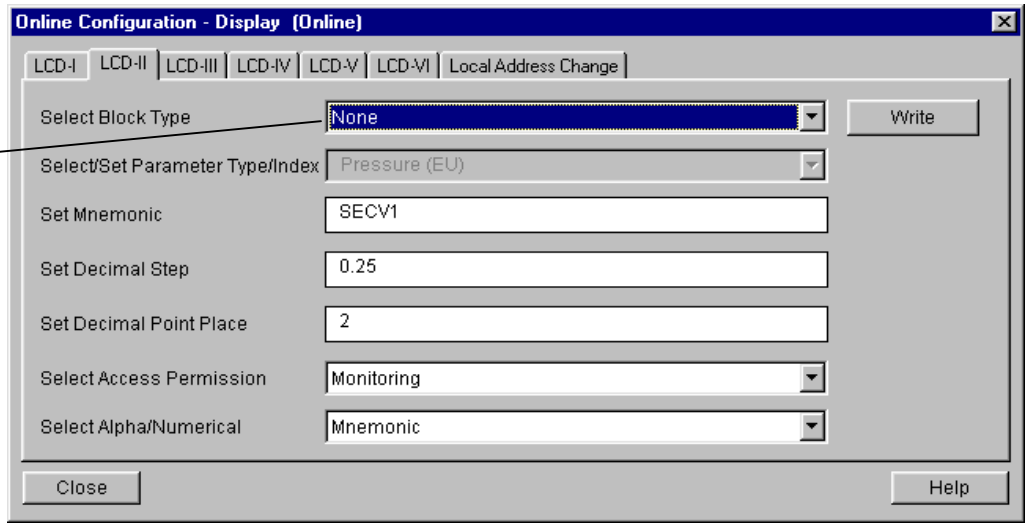

Figure 3.19 - Parameters for Local Adjustment Configuration

Always on the LCD interface will be shown two parameters at the same time, switching between the configured parameter at the LCD-II and the last monitoring parameter. If the user does not want to show two parameters at the same time, it is only necessary to opt for "none" when configure the LCD-II:

The user can select the "Mode Block" parameter at the LCD. In this case is necessary to select the index equal to "Mode Block":

With this option, the Mode Block parameter is shown at the LCD.

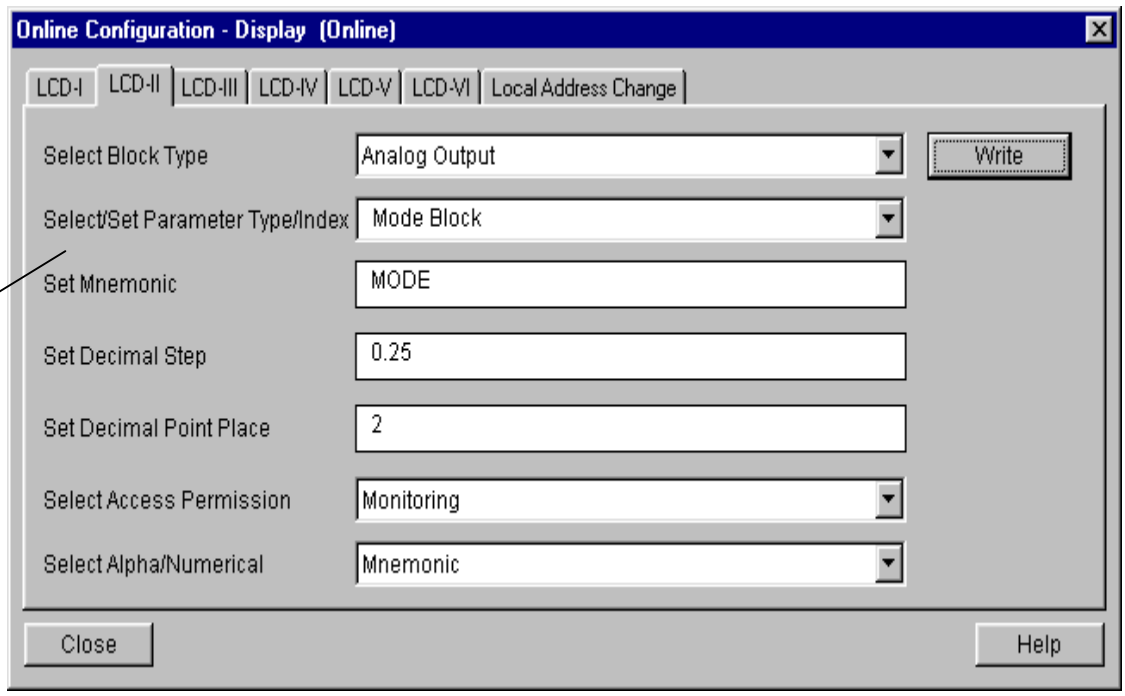

Figure 3.20 - Parameters for Local Adjustment Configuration

Programming Using Local Adjustment

The local adjustment is completely configured by **Simatic PDM or any other configuration tool**. It means, the user can select the best options to fit his application. From factory, it is configured with the options to set the Upper and Lower trim, for monitoring the input transducer output and check the Tag. Normally, the transmitter is much better configured by **configuratinon tool**, but the local functionality of the LCD permits an easy and fast action on certain parameters, since it does not rely on communication and network wiring connections. Among the possibilities by Local Adjustment, the following options can be emphasized: Mode block, Outputs monitoring, Tag visualization and Tuning Parameters setting.

The interface between the user is also described very detailed on the "General Installation, Operation and Maintenance Procedures Manual" Please take a detailed look at this manual in the chapter related to "Programming Using Local Adjustment". It is significantly the resources on this transducer display, also all the Series 303 field devices from **SPIRAX SARCO** has the same methodology to handle with it. So, since the user has learned once, he is capable to handle all kind of field devices from **SPIRAX SARCO**. This Local adjustment configuration is a suggestion only. The user may choose his preferred configuration via configuration toll, simply configuring the display block).

The positioner has two holes for magnetic switches, located under the identification plate. These magnetic switches are activeted by one magnetic tool.

This magnetic tool enables adjustment of the most important parameters of the blocks. It also enables pre-configuration of the communication.

The jumper W1 on top of the main circuit board must be in place and the positioner must be fitted with digital display for access to the local adjustment. Without display, the local adjustment is not possible.

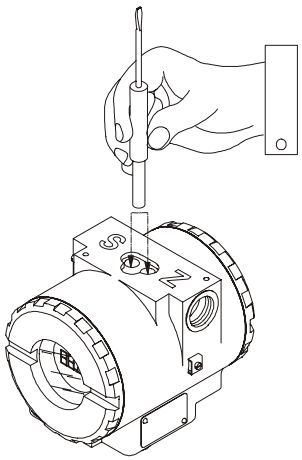

Fig. 3.21 - Local Adjustment Holes

Table 3.4 shows the actions on the **Z** and **S** holes on the SP303 when Local Adjustment is enabled.

HOLE	ACTION
Z	***Inicializes and rotates through the available functions.***
S	Selects the function shown in the display.

Table 3.4 - Purpose of the holes on the Housing

J1 Jumper Connections

If J1 (see figure 3.20) is connected to ON, then simulation mode in the AO block is enabled.

W1 Jumper Connections

If W1 is connected to ON, the local adjustment programming tree is enabled and then important block parameters can be adjusted and communication can be pre-configured via local adjustment.

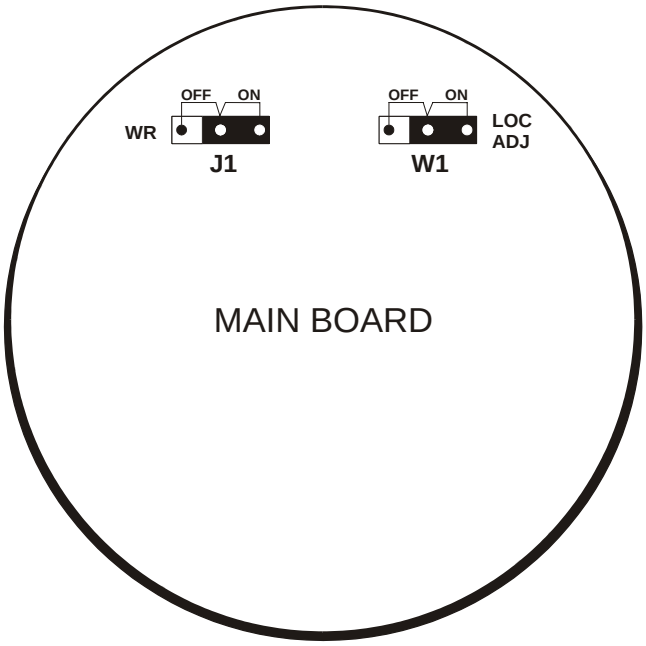

Fig. 3.22 - J1 and W1 Jumpers

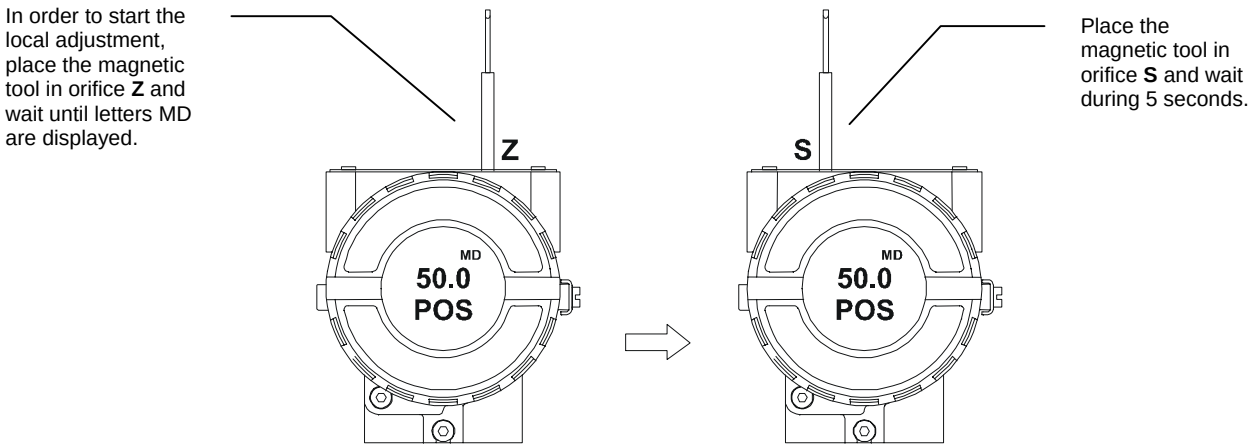

Figure 3.21 - Step 1 - SP303

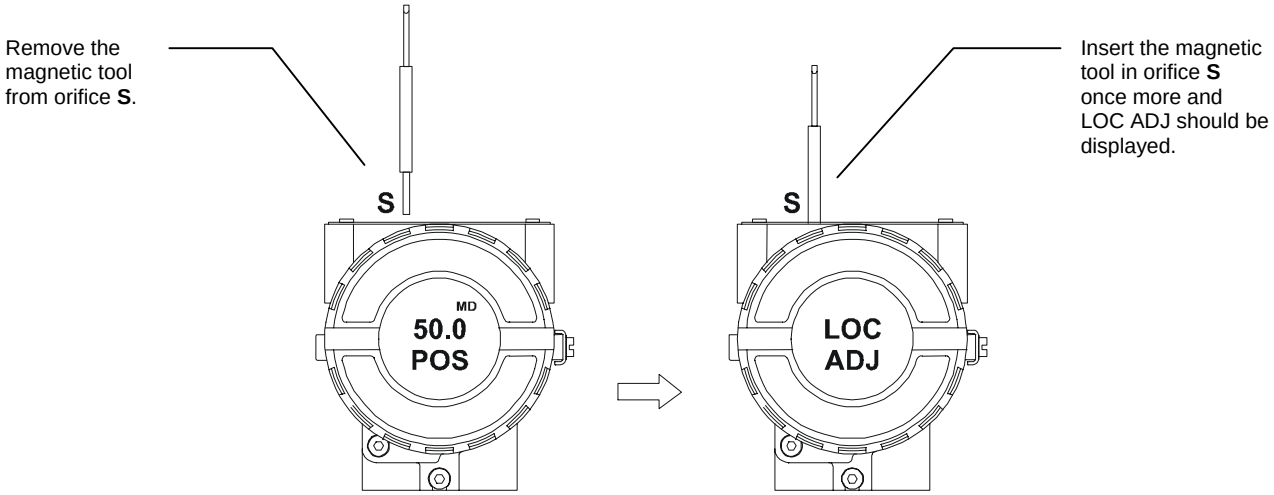

Figure 3.22 - Step 2 – SP303

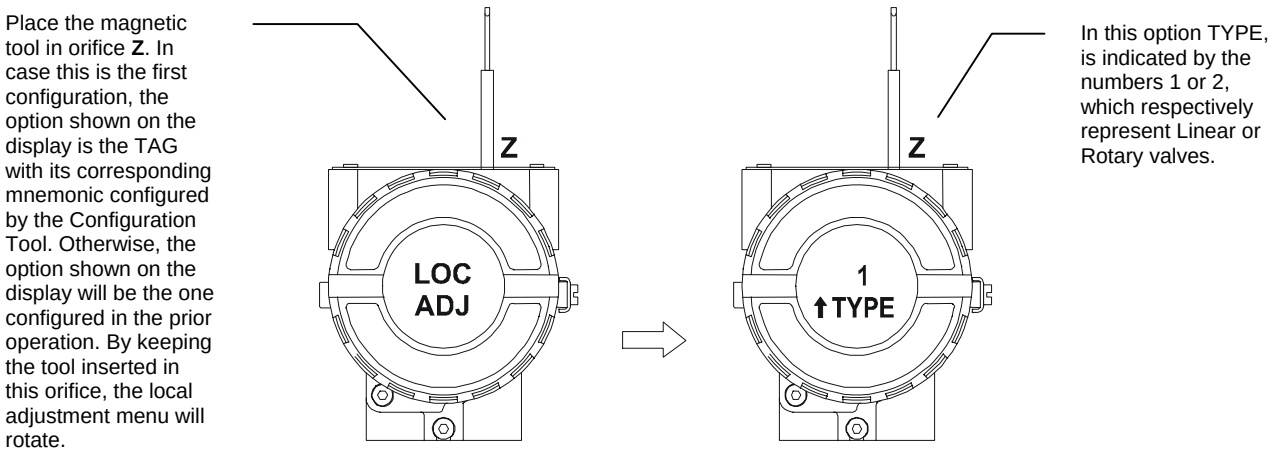

Figure 3.23 - Step 3 - SP303

In order to start the LOPOS, simply insert the magnetic tool in orifice **S** as soon as LOPOS is shown on the display. An arrow pointing upward (↑) increments the valve and an arrow pointing downward (↓) decrements the valve. In order to increment the lower position valve, keep the tool inserted in **S**.

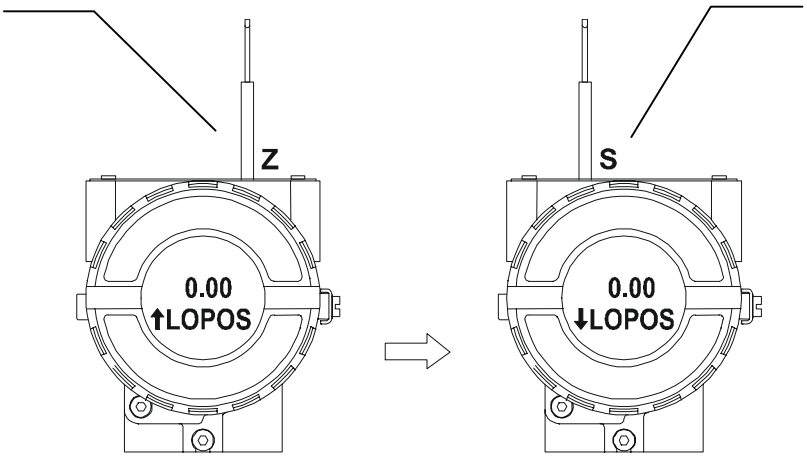

In order to decrement the lower position valve, place the magnetic tool in orifice **Z** to shift the arrow to the downward position and then, by inserting and keeping the tool in orifice **S**, it is possible to decrement the lower position valve.

Figure 3.24 - Step 4 – SP303

In order to start the UPPOS, simply insert the magnetic tool in orifice **S** as soon as UPPOS is shown on the display. An arrow pointing upward (↑) increments the valve and an arrow pointing downward (↓) decrements the valve. In order to increment the upper position valve, keep the tool inserted in **S**.

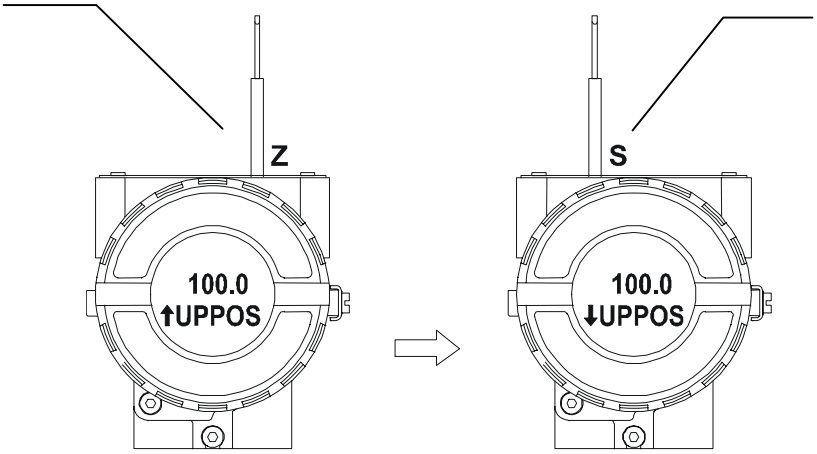

In order to decrement the upper position valve, place the magnetic tool in orifice **Z** to shift the arrow to the downward position an then, by insetting and keeping the tool in orifice **S**, it is possible to decrement upper position valve.

Figure 3.25 - Step 5 – SP303

Option FEED allows the user to correct the valve calibration. In order to implement the correction, read the valve indicated by the valve and enter it in this option. This option makes it possible to correct LOPOS as well as UPPOS. An arrow pointing upward increments the position valve.

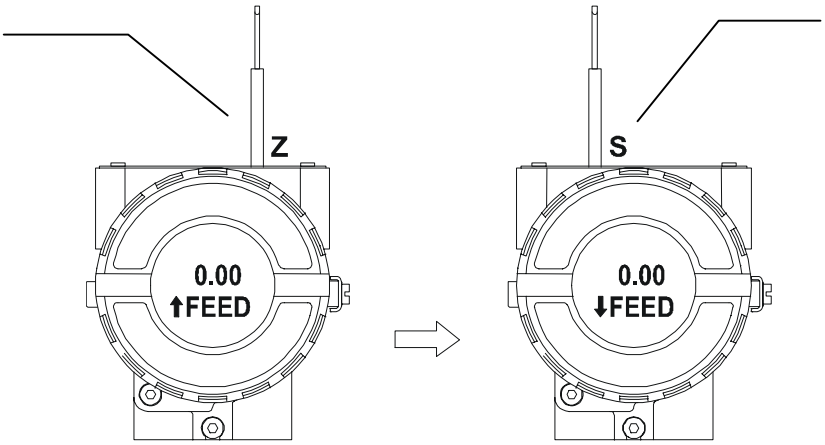

Place the magnetic tool in orifice **S** to shift the arrow to the downward position and decrement the calibration valve in accordance with the valve readout valve. An arrow pointing downward decrements the position valve.

Figure 3.26 - Step 6 - SP303

This option implements the auto setup of the valve, that is, the lower and upper position points of the valve. When setup displays 0 (zero), it indicates that the setup is disabled.

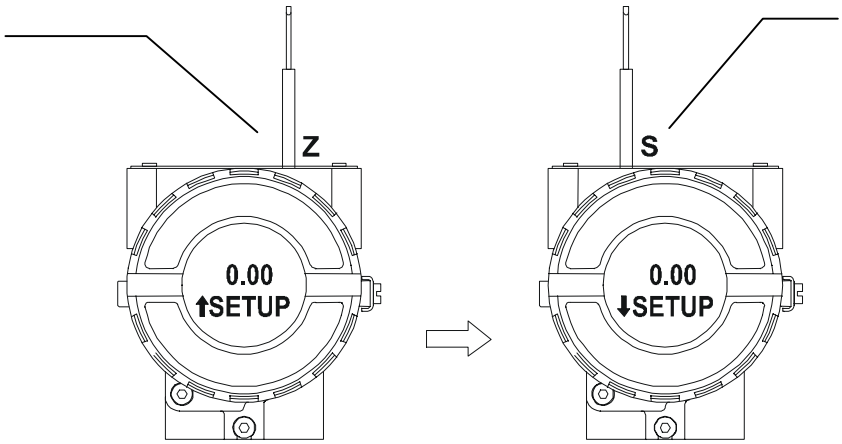

Insert the magnetic tool in orifice **S** and enter the value 2. After this, the auto setup will be started and a flashing message with the word SETUP will show in the display of the positioner. After this process finishes, the local adjustment returns to normal operation.

Figure 3.27 - Step 7 - SP303

a) In order to change the address value, simply take off the magnetic tool from orifice **Z** as soon as ADDR is shown on the display. An arrow pointing upward (↑) increments the address and an arrow pointing downward (↓) decrements the address. In order to increment the address, insert the tool in **S** up to set the value desired.

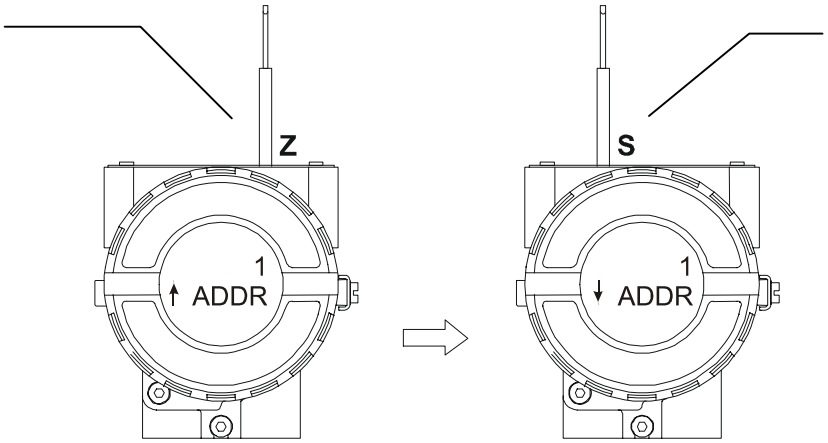

b) In order to decrement the address value, place the magnetic tool in orifice **Z** to shift the arrow to the downward position and then, by inserting and keeping the tool in orifice **S**, it is possible to decrement the address value.

Figure 3.28 - Step 8 - SP303

NOTE

Every time the Self Calibration is used it is suitable to save it via configuration tool, and to write in the Backup-Restore parameter of the transducer block the sensor Data Backup option.

This Local adjustment configuration is a suggestion only. The user may choose his preferred configuration via configuration tool, simply configuring the display block. (*refer to paragraph Display Transducer Block*)

Calibrating Via Local Adjustment

The positioner has two holes for magnetic switches, located under the identification plate (See the section "Programming Using Local Adjustment"). These magnetic switches are activated by one magnetic tool.

This magnetic tool enables adjustment of the most important parameters of the blocks. It also enables pre-configuration of the communication.

The jumper J1 on top of the main circuit board must be in place and the positioner must be fitted with the digital display for access to the local adjustment. Without the display the local adjustment is not possible.

In order to enter the local adjustment mode, place the magnetic tool in orifice “Z” until flag “MD” lights up in the display. Removes magnetic tool from “Z” and place it in orifice “S”. Remove and reinsert the magnetic tool in “S” until the message “LOC ADJ” is displayed.
The message will be displayed during approximately 5 seconds after the user removes the magnetic tool from “S”. By placing the magnetic tool in “Z” the user will be able to access the local adjustment/monitoring tree.

Browse to parameter “LOPOS”. After that in order to start the calibration, the user shall activate parameter “LOPOS” with the help of the magnetic tool placed in “S”. For example, it is possible to enter 0%. When the magnetic tool is removed from “S”, the output will be set to a value close to the desired value. The user shall then browse the tree up to parameter FEED (FEEDBACK_CAL), and actuate this parameter by placing the magnetic tool in “S” until reaching the value obtained from the position reference.

The user shall continue to write in this parameter until it reads 0% or the desired lower position value. Browse up to parameter “UPPOS”. After that, in order to start the calibration, the user shall actuate parameter “UPPOS” by placing the magnetic tool in “S”. For example, it is possible to enter 100%. When the magnetic tool is removed from “S”, the output will be set to a value close to the desired value. The user shall them browse the tree up to parameter FEED (FEEDBACK_CAL), and actuate this parameter by placing the magnetic tool in “S” until reaching the desired value.

The user shall write in this parameter until it reads 100% or the desired upper position value.
The LOWER and UPPER should be different.

LIMIT CONDITIONS OF CALIBRATION	
LOPOS (Lower Position)	Always equal 0%
UPPOS (Upper Position)	Always equal 100%
FEED	- 10% =< FEED =< 110%, otherwise XD_ERROR = 22

NOTE

Codes for XD_ERROR:

16: Default Value Set

22: Out of Range

26: Invalid Calibration Request

27: Excessive Correction

Self-Calibration using Local Adjustment

This process is necessary to find the position values at which the valve is considered fully open or close. This operation can be done using the **Configuration Tool** or the Local Adjustment. The **SP303** automatically finds the fully open and closed positions of a valve, but the user may also set a narrower range of operation should he like to. Before making the Auto-Setup, select the type of valve through the parameter VALVE_TYPE choosing between "Linear or Rotary" options.

The setup operation can be started writing "Enable" (2) on the parameter SETUP, so the positioner will execute immediately the operation of auto-setup for approximately 2 to 5 minutes depending on the type of valve, other configured parameters and function blocks used in the positioner.

The process will be finished when the SETUP parameter will indicate "Disable" (0) automatically during the operation of reading.

NOTE

This operation should be performed off-line or with the process shut down to be sure that the plant operation is not disturbed, due the valve will be moved between the fully open and close points in order to reach the better adjustment.

NOTE

In case of oscillation, decrease the gain of valve, acting on the SERVO GAIN parameter.

If the valve could be out-of-control after its operation, please, repeat the Self-Calibration operation again.

Hall's Offset Compensation Without Magnet Part

Before installing the magnet to the positioner, write "Enable" on the menu Factory Hall Offset at Device menu wait until the configuration tool set it back to "Disable" indicating end of its process of Hall's Offset compensation.

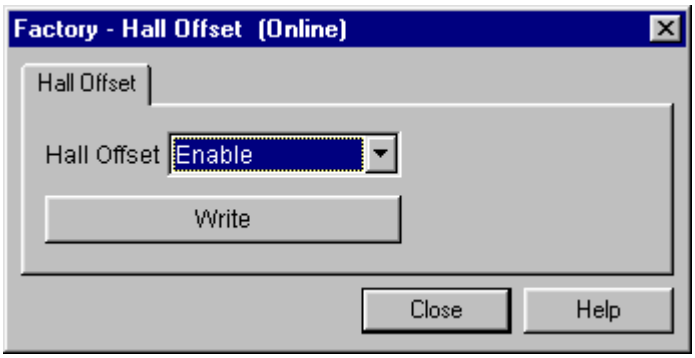

Figure 3.29 - Enabling the Hall's Offset Compensation

Figure 3.30 - Disabling the Hall's Offset Compensation

Temperature Compensation

Using the Calibration Temperature Menu at the Device , the user can trim the temperature sensor located at the body of positioner in order to improve the accuracy of temperature measurement done by its sensor. The range accepts from -40°C to +85 °C. The parameter Temperature indicates the value of such measurement.

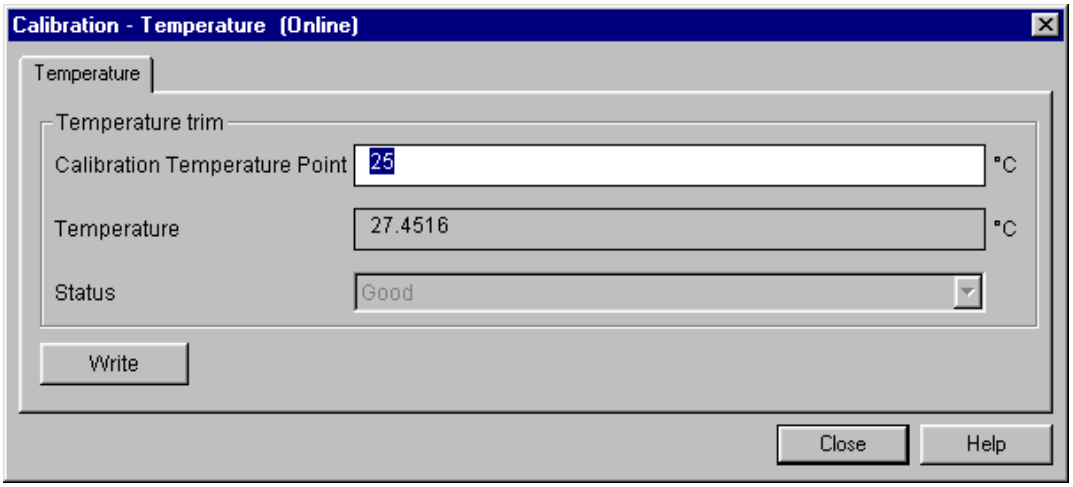

Figure 3.31 - Calibrating the Temperature Sensor

Maintenance Procedures

General

SPIRAX SARCO **SP303** Fieldbus to Valve Positioners are extensively tested and inspected before delivery to the end user. Nevertheless, during their design and development, consideration was given to the possibility of repairs by the end user, if necessary.

In general, it is recommended that the end user do not try to repair printed circuit boards. Instead, he should have spare circuit boards, which may be ordered from **SPIRAX SARCO** whenever necessary.

DIAGNOSTICS	
SYMPTOM	**PROBABLE ERROR SOURCE**
POSITION SHOWN ON DISPLAY	***Positioner Connections*** Check wiring polarity and continuity. ***Power Supply*** Check the minimum voltage signal equal 9 Volts. ***Electronics Failure*** Check circuit boards for bad connections and replace them for spare boards.
NO COMMUNICATION	***Network Connection*** Check network connections: equipment, power supply, couplers, links, terminators. ***Network Impedance*** Check network impedance (power supply and terminators impedance). ***Positioner Configuration*** Check the configuration of the positioner communication parameters. ***Network Configuration*** Check the network communication configuration. ***Electronics Failure*** Try spare parts in the positioner circuits.
NO RESPONSE TO INPUT SIGNAL	***Pressure Output Connections*** Check up on air leaks. ***Air Supply Pressure*** Check the air supply pressure. The input pressure to **SP303** shall be between 20 psi and 100 psi. ***Calibration*** Check the positioner calibration points. ***Obstructed Restriction and/or Blocked Output*** Observe the following procedures described in this Manual: OUTPUT CONNECTIONS and RESTRICTION CLEANING.
OSCILLATING ACTUATOR	***Calibration*** Adjust parameter Kp. Adjust parameter Tr.
SLOW ACTUATOR RESPONSE	Adjustment Parameters are Too Low Adjust parameter Kp.
TOO FAST ACTUATOR RESPONSE	Adjustment Parameters are Too High Adjust parameter Kp.

Table 4.1 - SP303 Diagnostics

If the problem is not presented in the table above follow the Note below:

NOTE

The Factory Init should be tried as a last option to recover the equipment control when the equipment presents some problem related to the function blocks or the communication. **This operation must only be carried out by authorized technical personnel and with the process offline, since the equipment will be configured with standard and factory data.**

This procedure resets all the configurations run on the equipment, after which a partial download should be performed. With exception to the equipment physical address and the gsd identifier number selector parameter. After doing this, all configurations must be remade according to their applications.

Two magnetic tools should be used to this efect,. On the equipment, withdraw the nut that fixes the identification tag on the top of the housing, so that access is gained to the "S" and "Z" holes.

The operations to follow are:

1) Switch off the equipment, insert the magnetic tools and keep them in the holes (the magnetic end in the holes);
2) Feed the equipment;
3) As soon as Factory Init is shown on the display, take off the tools and wait for the "5" symbol on the right upper corner of the display to unlit, thus indicating the end of the operation.

This procedure makes effective all the factory configuration and will eliminate eventual problems with the function blocks or with the equipment communication.

Note that this procedure must be performed by authorized personal only and with the process switched off, since the equipment will be configured with standard and factory data.

Disassembly Procedure

Refer to
Figure 4.3 - Exploded **View**. Make sure to disconnect power supply and supply pressure before disassembling the positioner.

TRANSDUCER

To remove the transducer from the electronic housing, the electrical connections (in the field terminal side) and the main board connector must be disconnected.

Loosen the hex screw (6) and carefully unscrew the electronic housing from the transducer, observing that the flat cable is not excessively twisted.

NOTE

The positioners have a stopper that can be released to allow the transducer to rotate more than one turn.

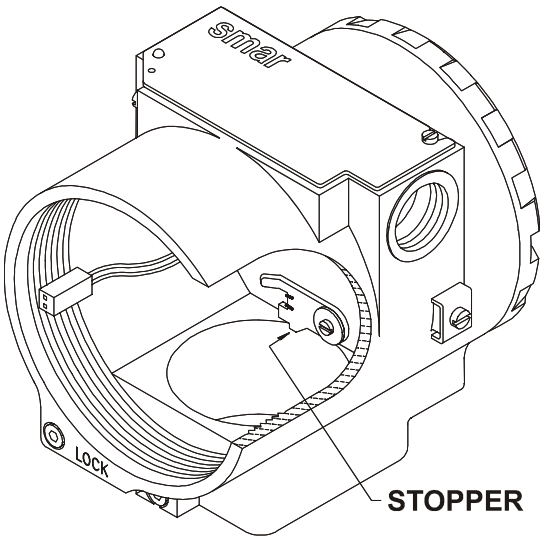

Figure 4.1 - Transducer Rotation Stopper

WARNING

Do not rotate the electronic housing more than 180º without disconnecting the electronic circuit from the power supply.

ELECTRONIC CIRCUIT
To remove the circuit board (5) and indicator (4), first loose the cover locking (13) on the side not marked “Field Terminals”, then unscrew the cover (1).

WARNING

The boards have CMOS components, which may be damaged by electrostatic discharges. Observe correct procedures for handling CMOS components. It is also recommended to store the circuit boards in electrostatic-proof cases.

Loosen the two screws (3) that anchors the indicator and the main circuit board. Gently pull out the indicator, and then the main board (5).

Reassembly Procedure

TRANSDUCER
Mount the transducer to the housing turning clockwise until it stops. Then turn it counterclockwise until it faces the square of electronic housing to the square of transducer. Tighten the hex screw (6) to lock the housing to the transducer.

CLEANING RESTRICTION
Air is supplied to the nozzle through a restriction. Poor quality instrument air can result in metal chips, dirt, etc, into the restriction.

A regular periodic check should be made to assure high quality performance of **SP303**. Make sure to disconnect supply pressure before remove the restriction (20) from the transducer. Cleaning by spraying it with a solvent. If necessary, restriction can be cleaned by inserting a drill with a maximum diameter of .011 in.

EXHAUST PORT
Air is vented to the atmosphere through the two exhausts ports located behind the transducer nameplate. A foreign object interfering or blocked exhaust port provides a way to increase the output. Cleaning by spraying it with a solvent.

NOTE

Never use oil or grease in the spool, otherwise the positioner performance will be impaired.

ELECTRONIC CIRCUIT
Plug transducer connector and power supply connector to main board.

Attach the display to the main board. Observe the four possible mounting positions (See Figure 4.2 - Four Possible Position of the Local Indicator). The ↑ mark indicates up position.

Anchor the main board and indicator with their screws (3).

After tightening the protective cover (1), mounting procedure is complete. The positioner is ready to be energized and tested.

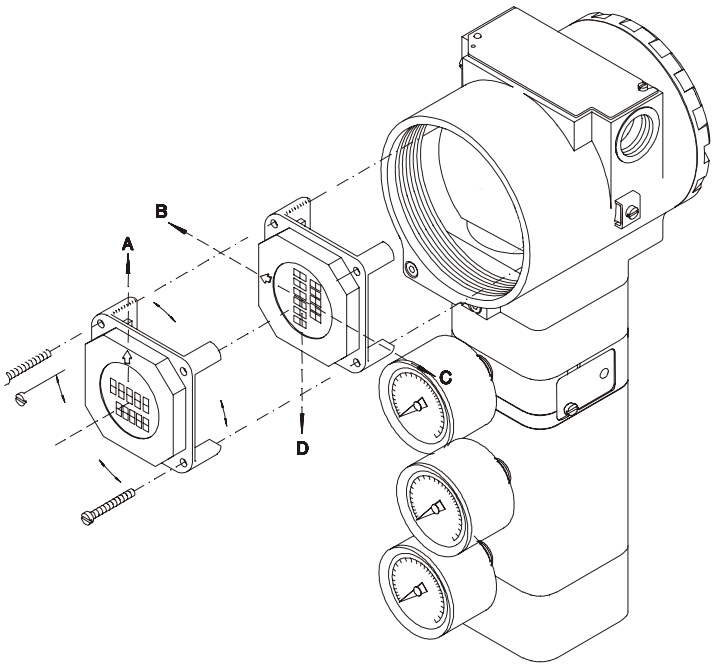

Figure 4.2 - Four Possible Position of the Local Indicator

INTERCHANGEABILITY
Main board can be changed and operate with the transducer. There is an EEPROM in the transducer part that keeps the trim.

RETURNING MATERIALS
Should it become necessary to return the positioner to SPIRAX SARCO, simply contact your local agent or SPIRAX SARCO office, informing the defective instrument's serial number, and return it to our factory.

In order to expedite analysis and solution of the problem, the defective item should be returned with a description of the failure observed, with as many details as possible. Other information concerning to the instrument operation, such as service and process conditions, is also helpful.

ACCESSORIES	
ORDERING CODE	**DESCRIPTION**
SD1	Magnetic Tool for Local Adjustment
BC1	Fieldbus/RS232 Interface
PS302	Power Supply
FDI302	Field Device Interface
BT302	Terminator
SB302	Intrinsic
DF48	Fieldbus Repeater

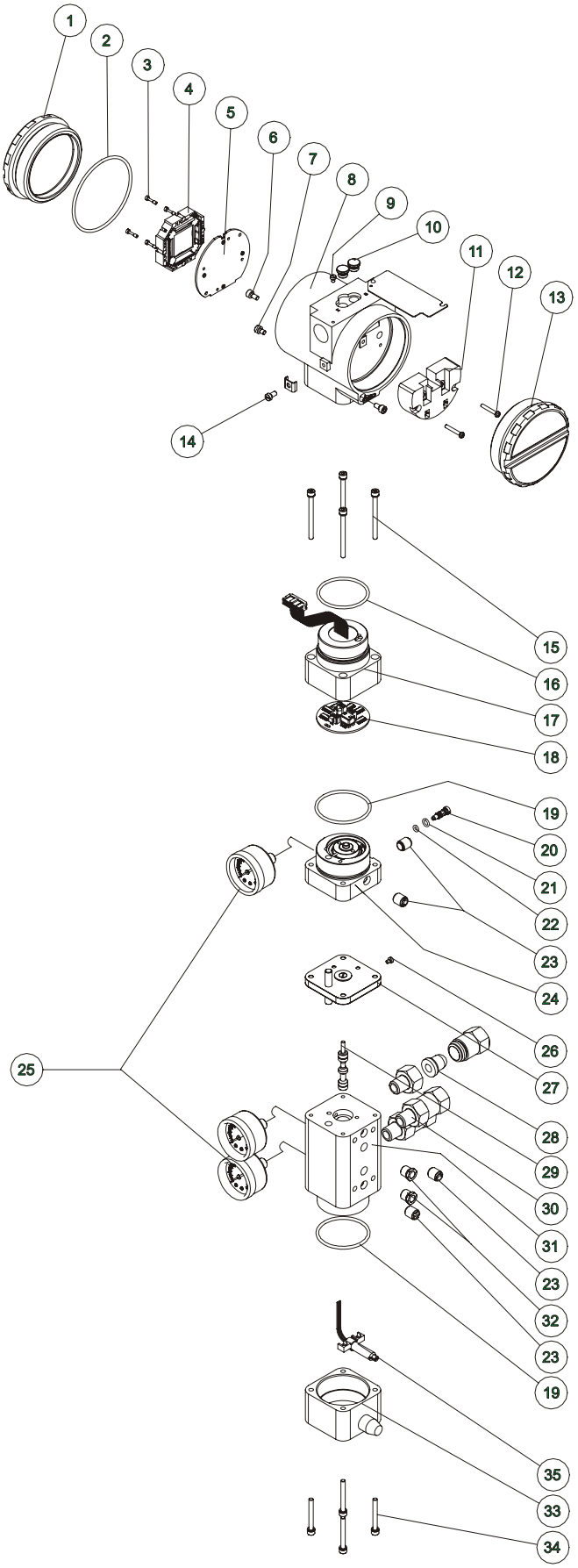

Figure 4.3 - Exploded View

SPARE PARTS LIST			
PARTS DESCRIPTION	**POSITION**	**CÓDE**	**CATEGORY (NOTE 4)**
HOUSING, Aluminum (**NOTE 1**)			
. 1/2 - 14 NPT	8		-
. M20 x 1.5	8		-
. PG 13.5 DIN	8		-
HOUSING, 316 SS (**NOTE 1**)			
. 1/2 - 14 NPT	8		-
. M20 x 1.5	8		-
. PG 13.5 DIN	8		-
COVER (INCLUDES O'RING)			
. Aluminum	1 e 13	204-0102	-
. 316 SS	1 e 13	204-0105	-
COVER WITH WINDOW FOR INDICATION (INCLUDES O' RING)			
. Aluminum	1	204-0103	-
. 316 SS	1	204-0106	-
COVER LOCKING BOLT	7		-
SENSOR LOCKING BOLT	6		-
EXTERNAL GROUND BOLT	14		-
IDENTIFICATION PLATE FIXING BOLT	9		-
DIGITAL INDICATOR	4	214-0108	A
TERMINAL INSULATOR	11		A
MAIN ELECTRONIC CIRCUIT BOARD	5	400-0290	A
0-RINGS COVER (**NOTE 2**)			
. Buna-N	2	204-0122	B
TERMINAL HOLDING BOLT HOUSING IN ALUMINUM			
Housing in 316 Stainless Steel	2		B
Housing in 316 Stainless Steel	12		B
MAIN BOARD BOLT HOUSING IN ALUMINUM			
Units with indicator	3		B
Units without indicator	3		B
MAIN BOARD BOLT HOUSING IN 316 STAINLESS STEEL			
Units with indicator	3		B
Units without indicator	3		B
ALUMINUM CONNECTION COVER	15,16,17 and 18		A
316 STAINLESS STEEL CONNECTION COVER	15,16,17 and 18		A
. Connection Cover Bolt	15		-
. Buna N Neck O-ring	16	204-0113	B
. Assembled Connection Cover - Aluminum	17		-
. Assembled Connection Cover - 316 Stainless Steel	17		-
. Analog PC Board GLL 1012	18		-
PIEZO BASE SET – ALUMINUM	19,20,21,22, 23,24 and 25		A
PIEZO BASE SET – 316 STAINLESS STEEL	19,20,21,22, 23,24 and 25		A
. Base and Block O'ring	19		B
. Restriction	20		B
. Restriction External O-ring	21	344-0155	B
. Restriction Internal O-ring	22	344-0150	B
. Syntherized Bushing	23		B
. Assembled Base – Aluminum	24		A
. Assembled Base – 316 Stainless Steel	24		A
. Analog indicator (Pressure gauge) – Carbon Steel	25		B
. Analog indicator (Pressure gauge) – 316 Stainless Steel	25		B
ALUMINUM INTERMEDIATE SET	26 and 27		A
316 STAINLESS STEEL INTERMEDIATE SET	26 and 27		A
. Identification tag bolt	26		-
. Assembled diaphragm – Aluminum	27		B
. Assembled diaphragm – 316 Stainless Steel	27		B

SPARE PARTS LIST			
PARTS DESCRIPTION	**POSITION**	**CÓDE**	**CATEGORY (NOTE 4)**
ALUMINUM BLOCK SET	19,23,25,28,29,30,31 and 32		A
316 STAINLESS STEEL BLOCK SET	19,23,25,28,29,30,31 and 32		A
. Base & Block O-ring	19		-
. Syntherized Bushing	23		-
. Analog indicator (Pressure gauge) – Carbon Steel	25		-
. Analog indicator (Pressure gauge) – 316 Stainless Steel	25		-
. Filtering Element	28		A
. Spool valve	29		-
. 304 Stainless steel Filter- 1/4" NPT	30		B
. Assembled Block– Aluminum	31		-
. Assembled Block – 316 Stainless Steel	31		-
. Vent Plug – Bronze	32		-
. Vent Plug - 316 Stainless Steel	32		-
ALUMINUM HALL COVER SET	33,34 and 35		A
316 STAINLESS STEEL HALL COVER SET	33,34 and 35		A
. Aluminum Hall Cover Set	33		-
. 316 Stainless Steel Hall Cover Set	33		-
. Hall Cover Bolt	34		-
. Hall Support + Hall Sensor + Flat cable	35		B
ALUMINUM TRANSDUCER SET 316 STAINLESS STEEL TRANSDUCER SET	**NOTE 3**	209-0180	A A
LOCAL ADJUSTMENT PROTECTION COVER.	10		
MAGNETS			
. Linear magnet 15mm.	**-**	400-0034	-
. Linear magnet 30mm.	**-**	400-0038	-
. Linear magnet 50mm.	**-**	400-0035	-
. Linear magnet 100mm.	**-**	400-0036	-
. Rotative magnet.	**-**	400-0037	-

Table 4.2 - Spare Part List

Note:
1) Includes terminal isolator, bolts (cover locking, ground and terminal isolator) and identification plate without certification.
2) O' rings are packaged with 12 units.
3) Includes all transducer's spare parts.
4) For category **A**, it is recommended to keep, in stock, 25 parts installed for each set, and for category **B**, 50.

NOTE
It includes Terminal holder insulator, bolts (cover lock, grounding and terminal holder insulator) and identification plate without certification. 0-Rings are packaged in packs of 12 units. The 14 spare part include the 15, 17, 18, 19, 20 and 23 spare parts

TECHNICAL CHARACTERISTICS

Functional Specifications

Travel
Linear Motion: 3 - 100 mm.
Rotary Motion: 30 - 120° Rotation Angle.

Input Signal
Digital only. Fieldbus, 31.25 Kbits/s voltage mode with bus power.

Output
Output to actuator 0 -100% supply air pressure. Single or double-action.

Power Supply
Bus powered: 9-32 Vdc.
Output impedance (from 7.8 kHz - 39 kHz):
Non-intrinsic safety: ≥ 3 kΩ.
Intrinsic safety: ≥ 400 Ω (assuming an IS barrier in the power supply).

Pressure Supply
1.4 - 7 bar (20-100 psi) free of oil, dust and water.

Indication
Optional 4 ½ - digit numerical and 5-character alphanumerical LCD indicator.

Hazardous Location Certification
Explosion proof, weather proof and intrinsically safe CEPEL, FM, CSA, NEMKO and DMT standards (pending).

Temperature Limits
Operation: -40 to 85 ºC (-40 to 185 ºF).
Storage: -40 to 90 ºC (-40 to 194 ºF).
Display: -10 to 60 ºC (14 to 140 ºF) operation.
-40 to 85 ºC (-40 to 185 ºF) without damage.

Humidity Limits
0 to 100% RH.

Turn-on Time
Approximately 10 seconds.

Update Time
Approximately 0.5 second.

Flow Characterization
Linear, equal percentage, quick opening and customer configuration through fieldbus communication from e.g., a PC or by the local adjustment switches.

Gain
Through software. Locally adjustable.

Travel Time
Through software. Locally adjustable.

Actual Position Sensing
Magnet (Non-contact) via Hall Effect.

Configuration
Basic configuration may be done using local adjustment magnetic tool if device is fitted with display. Complete configuration is possible using remote configurator (Ex.: **Simatic PDM, from Siemens).**

Performance Specifications

Resolution
≤ 0.1% F.S.

Repeatibility
≤ 0.1% F.S.

Hysteresis
≤ 0.2% F.S.

Consumption
0.25 Nm/h (0.15 SCFM) at 1.4 bar (20 psi) supply.
0.70 Nm/h (0.40 SCFM) at 5.6 bar (80 psi) supply.

Output Capacity
46.7 Nm/h (28 SCFM) at 5.6 (80 psi) supply.

Ambient Temperature Effect
0.8%/20 ºC do span.

Supply Pressure Effect
Negligible.

Vibration Effect
±0.3%/g of span during the following conditions:
5-15 Hz at 4 mm constant displacement.
15-150 Hz at 2g.
150-2000 HZ at 1g.
Reference SAMA PMC 31.1 - 1980, Sec. 5.3, Condition 3, Steady State.

Electro-Magnetic Interference Effect
Designed to comply with IEC 801 and European Standards EN50081 and EN50082.

Physical Specifications

Electrical Connection
1/2 -14 NPT, Pg 13.5 or M20 × 1.5.

Pneumatic Connections
Supply and output: 1/4 - 18 NPT
Gage: 1/8 - 27 NPT

Material of Construction
Injected low copper aluminum with polyester painting or 316 Stainless Steel housing, with Buna-N O-rings on cover (NEMA 4X, IP67).

Weight
Without display and mounting bracket: 2.7 kg.
Add for digital display: 0.1 kg.

SP30	POSITIONER

COD.	Protocol
1	4-20 mA + Hart
2	Foundation Fieldbus
*3	Profibus PA

COD.	Bracket Mounting Kit **
0	Without Kit
*1	With Kit (bracket + magnet)

COD.	Electrical Connections
*0	½ - 14 NPT
A	M20 x 1.5
B	PG 13.5 DIN

COD.	Type of Actuator **
*1	Rotary – Single Action
2	Rotary – Double Action
*3	Linear – Single Action
4	Linear – Double Action
5	Others Specify

COD.	Indication Gauge
0	Without Gauge
1	With Gauge – Input
2	With Gauge - Output 1
*3	With 2 Gauges – Input and Output 1
4	With 2 Gauges – Output 1 and 2
5	With 3 Gauges
Z	Others Specify

COD.	Other features
H1	316 SST Housing and body
R1	Remote sensor
I2	Explosion Proof (ATEX)
*I4	Intrinsically Safe (ATEX)
J1	Tag on label
SZ	Specify special application

SP30	-	3	-	1	-	0	3	3	-	I4	**Typical code number.**

* STANDARD

** Appropriate magnet to be specified on mounting kit

KMS	BRACKET/ MAGNET KIT

COD	Bracket Kit
0	Without Positioner Bracket
1	Universal Rotary
2	Universal Linear (Yoke and Pillar)
***3**	Linear Spirax Sarco Valves
4	Rotary Spirax Sarco Valves
Z	Others – Specify

COD	Magnet
0	Rotary
***1**	Linear Up to 15 mm
***2**	Linear Up to 30 mm
***3**	Linear Up to 50 mm
4	Linear Up to 100 mm
Z	Others – Specify

COD	Mounting Bracket Material
***C**	Carbon Steel Bracket
I	316 Stainless Steel Bracket
Z	Others – Specify

COD.	Optional Item
SYZ	Specify Actuator Model / Company

KMS	-	1	0	-	C	/	**

**** Leave it blank for no optional item.**

* STANDARD

Section 6

HAZARDOUS LOCATION INSTALLATION AND APPROVALS

INSTALLATION AND OPERATION

Warning:

General Rule:

- Installation in accordance with IEC 60079-14
- Match the certificate parameters according to the environmental classification

For Ex-d protection application:

- Only use Plugs, Adapters and Cable glands certified for Ex d.
- Do not use sealing in the threads of Plugs, Adapters and Cable glands
- Do not open in Hazardous Location when energized

For Ex-i protection application:

- Installation in accordance with IEC 60079-14
- The Transmitter must be connected to a barrier
- Match the parameters between barrier and the equipment (Consider the cable parameters)
- Associated apparatus ground bus to be insulated from panels and mounting enclosures
- Shield is optional if used, be sure to insulate the end not grounded
- Cable capacitance and inductance plus Ci and Li must be smaller than Co and Lo of the Associated Apparatus

Hazardous Location Approvals

FM Approval

Intrinsic Safety Protection (FM Report 3D9A2.AX)

Class I (Gases and Vapors)
Division 1 (Where ignitable concentrations of flammable gases, vapors or liquids can exist all of time or some of the time under normal conditions)
Groups A (Acetilene), B (Hydrogen), C (Ethylene) and D (Propane)

Class II (Dusts)
Division 1 (Where ignitable concentrations of combustible dusts can exist all of time or some of the time under normal conditions)
Groups E (Metal Dust), F (Coal Dust) and G (Grain Dust)

Class III (Fibers)
Division 1 (Where easily ignitable fibers or materials producing combustible flyings are handled, manufactured or used)

- Temperature Class T4 (Maximum Surface Temperature = 135ºC)
- Maximum Ambient Temperature: 60ºC
- Entity Parameters:
  Vmax = 24 Vdc Imax = 250 mA Pi = 1.2 W Ci = 5 nF Li = 12 uH
  Vmax = 16 Vdc Imax = 250 mA Pi = 2.0 W Ci = 5 nF Li = 12 uH
- Instalation Drawing: 102A-1014-00
- Valid Options:
  a = Local Indicator 0 or 1
  b = Mounting bracket 0, 1 or 2
  c = Electrical Connections 0, A or B
  d = Valve or 1
  e = Optio H1 or blank

Explosion Proof Protection (FM Report 3007267)

Class I (Gases and Vapors)
Division 1 (Where ignitable concentrations of flammable gases, vapors or liquids can exist all of time or some of the time under normal conditions)
Groups A (Acetilene), B (Hydrogen), C (Ethylene) and D (Propane)

- Temperature Class T4 (Maximum Surface Temperature = 135ºC)
- Maximum Ambient Temperature: 60ºC
- Valid Options:
  a = Local Indicator 0 or 1
  b = Mounting bracket 0 or 1
  c = Type of actuator (not part of Approval): single alpha-numeric designation
  d = Indication gauge: 0, 1, 2, 3, 4 or 5
  e = Option H1 or blank

Dust Ignition Proof Protection (FM Report 3D9A2.AX and FM Report 3007267)

Class II (Dusts)
Division 1 (Where ignitable concentrations of combustible dusts can exist all of time or some of the time under normal conditions)
Groups E (Metal Dust), F (Coal Dust) and G (Grain Dust)

Class III (Fibers)

Division 1 (Where easily ignitable fibers or materials producing combustible flyings are handled, manufactured or used)

- Temperature Class T4 (Maximum Surface Temperature = 135ºC)
- Maximum Ambient Temperature: 60ºC

Non Incendive Protection (FM Report 3D9A2.AX)

Class I (Gases and Vapors)
Division 2 (Where ignitable concentrations of flammable gases, vapors or liquids are not likely to exist under normal operating conditions)
Groups A (Acetilene), B (Hydrogen), C (Ethylene) and D (Propane)

- Temperature Class T4 (Maximum Surface Temperature = 135ºC)
- Maximum Ambient Temperature: 60ºC

Degree of Protection (FM Report 3D9A2.AX and FM Report 3007267)

Type 4X (Enclosures constructed for either indoor or outdoor use to provide a degree of protection to personnel against incidental contact with the enclosed equipment; to provide a degree of protection against falling dirt, rain, sleet, snow, windblown dust, splashing water, hose-directed water, and corrosion; and that will be undamaged by the external formation of ice on the enclosure. Ref: Nema 250)

CSA Approval

Hazardous Location (CSACertificate 1078546)

Class I (Gases and Vapors),
Division 1 (Where ignitable concentrations of flammable gases, vapors or liquids can exist all of time or some of the time under normal conditions)
Groups B (Hydrogen), C (Ethylene) and D (Propane)

Class II (Dusts)
Division 1 (Where ignitable concentrations of combustible dusts can exist all of time or some of the time under normal conditions)
Groups E (Metal Dust), F (Coal Dust) and G (Grain Dust)

Class III (Fibers)
Division 1 (Where easily ignitable fibers or materials producing combustible flyings are handled, manufactured or used)

- Input Supply 12-42Vdc, 4-20mA;
- Maximum Working Pressure 100psi

Class I (Gases and Vapors)
Division 2 (Where ignitable concentrations of flammable gases, vapors or liquids are not likely to exist under normal operating conditions)
Groups A (Acetilene), B (Hydrogen), C (Ethylene) and D (Propane)

Class II (Dusts)
Division 2 (Where ignitable concentrations of combustible dusts are not likely to exist under normal operating conditions)
Groups E (Metal Dust), F (Coal Dust) and G (Grain Dust)

Class III (Fibers)

- Input Supply 12-42Vdc, 4-20mA;
- Maximum Working Pressure 100psi

Intrinsically Safe Protection (CSACertificate 1078546)

Class I (Gases and Vapors)
Division 1 (Where ignitable concentrations of flammable gases, vapors or liquids can exist all of time or some of the time under normal conditions)
Groups A (Acetilene), B (Hydrogen), C (Ethylene) and D (Propane)

Class II (Dusts)
Division 1 (Where ignitable concentrations of combustible dusts can exist all of time or some of the time under normal conditions)
Groups E (Metal Dust), F (Coal Dust) and G (Grain Dust)

Class III (Fibers)
Division 1 (Where easily ignitable fibers or materials producing combustible flyings are handled, manufactured or used)

- Input Supply12-42V dc, 4-20mA;
- Intrinsically safe with entity parameters at terminal “+” and “-“ of: Vmax = 24 V Imax = 250 mA Ci = 5 nF Li = 12 uH when connected as per Spirax Sarco Instalation Drawing 102A-1016-00
- Temperature Class T3C (Maximum Surface Temperature = 160 ºC)
- Maximum Ambient Temperature: 40ºC
- Maximum Working Pressure 100psi

Degree of Protection (CSACertificate 1078546)

Type 4X (Enclosures constructed for either indoor or outdoor use to provide a degree of protection to personnel against incidental contact with the enclosed equipment; to provide a degree of protection against falling dirt, rain, sleet, snow, windblown dust, splashing water, hose-directed water, and corrosion; and that will be undamaged by the external formation of ice on the enclosure. Ref: Nema 250)

NEMKO Approval

Explosion Proof Protection (Nemko 00ATEX305)

Group II (Other than mines)
Category 2 (for zone 1: Where igniable concentrations of flamable gases, vapors or liquids are likely to exist under normal operating conditions)
G (Gases, Vapours and Mist)
Method of Protection: EEx d (Explosion Proof)
Group IIC (Acetylene)
Temperature Class: T6 (Maximum Surface Temperature = 85º)

- Vmax = 32 Vdc Imax = 12 mA
- Pressure = 20 – 100 psi
- Ambient Temperature: 40ºC

Ingress Protection

IP67 (6: Dust-tight; 7: Effects of immersion)

DMT Approval

Intrinsic Safety Protection (DMT 01 ATEX E 011)

Group II (Other than mines)
Category 2 (for zone 1: Where igniable concentrations of flamable gases, vapors or liquids are likely to exist under normal operating conditions)
G (Gases, Vapours and Mist)
Method of Protection: EEx d [ia] (Intrisic Safety)
Group IIC (Acetylene)
Temperature Class T6 (Maximum Surface Temperature = 85º)

- Entity Parameters: Pi = 1500 mW Ui = 24 Vdc Ii = 250 mA Ci ≤ 5 nF Li = 0
- Ambient Temperature: -20º< Ta < 40ºC

Ingress Protection

IP65 (6: Dust-tight; 5: Water jets)

Control Drawings

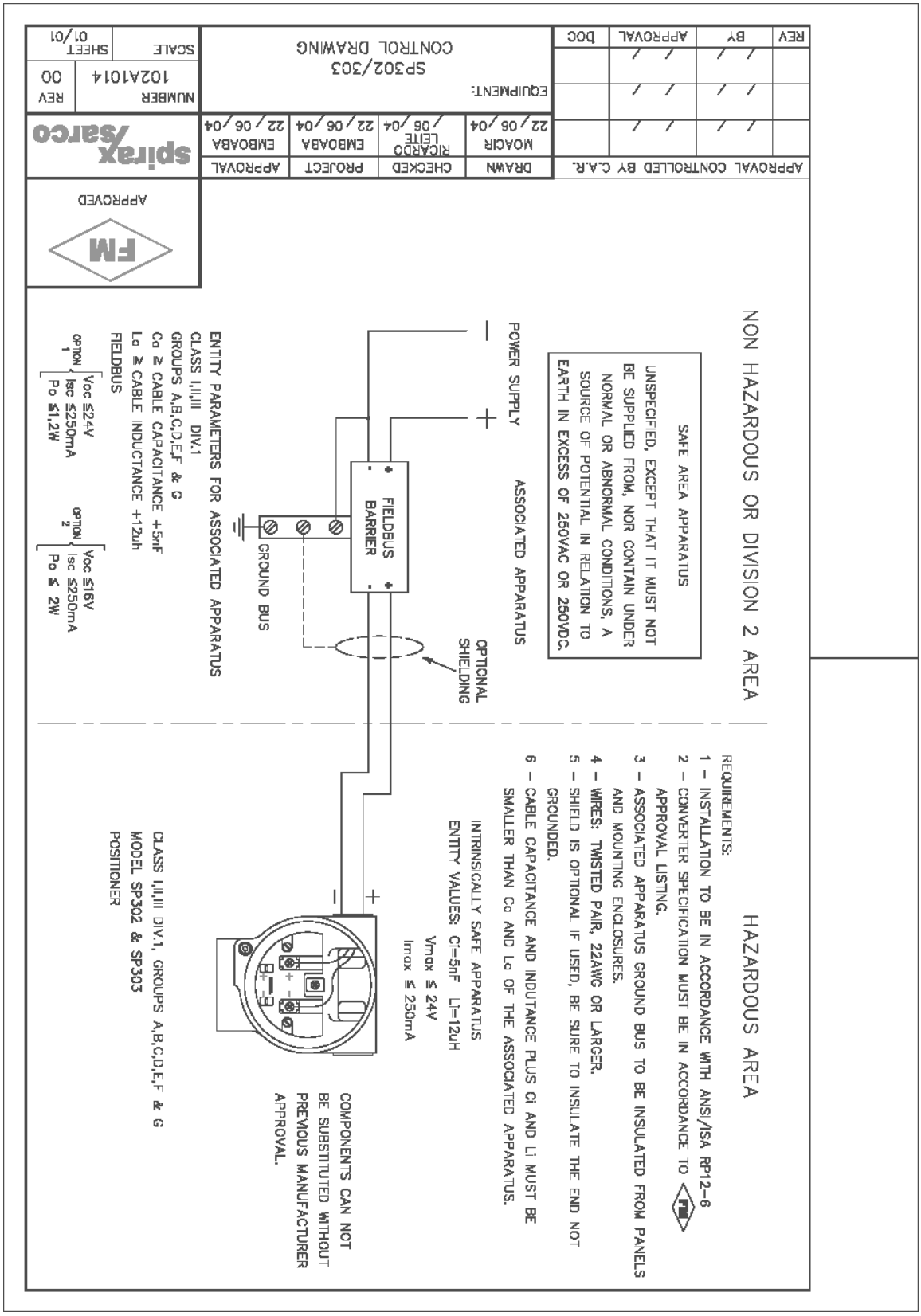

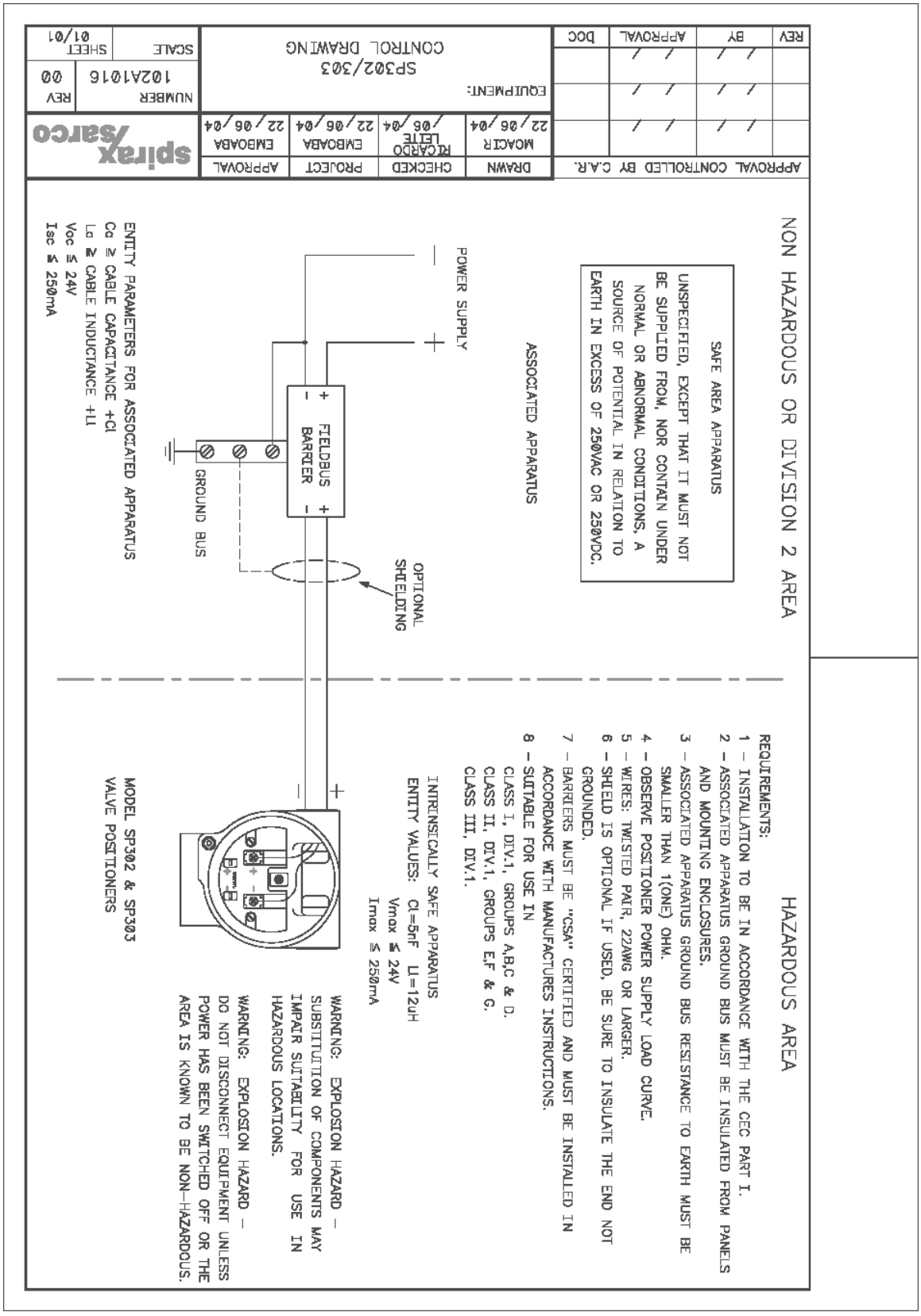
NON HAZARDOUS OR DIVISION 2 AREA
SAFE AREA APPARATUS
UNSPECIFIED, EXCEPT THAT IT MUST NOT BE SUPPLIED FROM, NOR CONTAIN UNDER NORMAL OR ABNORMAL CONDITIONS, A SOURCE OF POTENTIAL IN RELATION TO EARTH IN EXCESS OF 250VAC OR 250VDC.
ASSOCIATED APPARATUS
POWER SUPPLY
FIELDBUS BARRIER
GROUND BUS
OPTIONAL SHIELDING
ENTITY PARAMETERS FOR ASSOCIATED APPARATUS
Ca ≥ CABLE CAPACITANCE +Ci
La ≥ CABLE INDUCTANCE +Li
Voc ≤ 24V
Isc ≤ 250mA
HAZARDOUS AREA
REQUIREMENTS:
1 – INSTALLATION TO BE IN ACCORDANCE WITH THE CEC PART I.
2 – ASSOCIATED APPARATUS GROUND BUS MUST BE INSULATED FROM PANELS AND MOUNTING ENCLOSURES.
3 – ASSOCIATED APPARATUS GROUND BUS RESISTANCE TO EARTH MUST BE SMALLER THAN 1(ONE) OHM.
4 – OBSERVE POSITIONER POWER SUPPLY LOAD CURVE.
5 – WIRES: TWISTED PAIR, 22AWG OR LARGER.
6 – SHIELD IS OPTIONAL IF USED, BE SURE TO INSULATE THE END NOT GROUNDED.
7 – BARRIERS MUST BE "CSA" CERTIFIED AND MUST BE INSTALLED IN ACCORDANCE WITH MANUFACTURES INSTRUCTIONS.
8 – SUITABLE FOR USE IN
CLASS I, DIV.1, GROUPS A,B,C & D.
CLASS II, DIV.1, GROUPS E,F & G.
CLASS III, DIV.1.
INTRINSICALLY SAFE APPARATUS
ENTITY VALUES: Ci=5nF Li=12uH
Vmax ≤ 24V
Imax ≤ 250mA
WARNING: EXPLOSION HAZARD – SUBSTITUTION OF COMPONENTS MAY IMPAIR SUITABILITY FOR USE IN HAZARDOUS LOCATIONS.
WARNING: EXPLOSION HAZARD – DO NOT DISCONNECT EQUIPMENT UNLESS POWER HAS BEEN SWITCHED OFF OR THE AREA IS KNOWN TO BE NON-HAZARDOUS.
MODEL SP302 & SP303
VALVE POSITIONERS
APPROVAL CONTROLLED BY C.A.R.
DRAWN MOACIR 22/06/04
CHECKED RICARDO LEITE 22/06/04
PROJECT EMBOABA 22/06/04
APPROVAL EMBOABA 22/06/04
spirax sarco
EQUIPMENT: SP302/303
CONTROL DRAWING
NUMBER 102A1016
REV 00
SCALE
SHEET 01/01
REV BY APPROVAL DOC