spirax sarco

37D and 37DE Temperature Controls

Installation and Maintenance Instructions

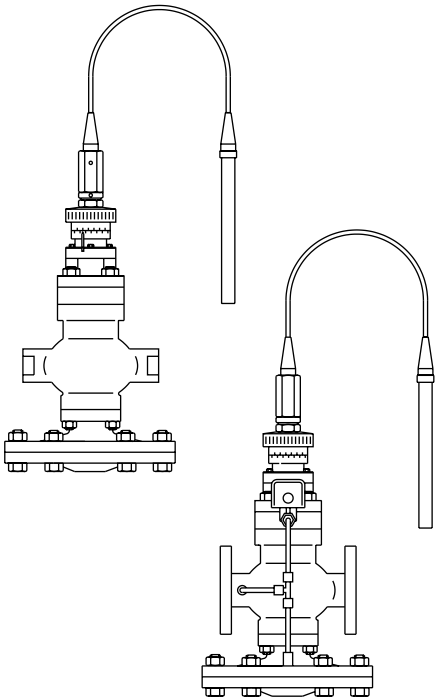

1. *General safety information*
2. *Installation*
3. *Start-up*
4. *Maintenance*
5. *Spare parts*
6. *Fault finding*

spirax sarco

1. General safety information

Safe operation of these units can only be guaranteed if they are properly installed, commissioned and maintained by a qualified person (see Section 11 of the attached Supplementary Safety Information) in compliance with the operating instructions. General installation and safety instructions for pipeline and plant construction, as well as the proper use of tools and safety equipment must also be complied with.

Warning

The body gasket contains a thin stainless steel support ring which may cause physical injury if not handled and disposed of carefully.

Isolation

Consider whether closing isolating valves will put any other part of the system or personnel at risk. Dangers might include; isolation of vents and protective devices or alarms. Ensure isolation valves are turned off in a gradual way to avoid system shocks.

Pressure

Before attempting any maintenance consider what is or may have been in the pipeline. Ensure that any pressure is isolated and safely vented to atmospheric pressure before attempting to maintain the product, this is easily achieved by fitting Spirax Sarco depressurisation valves type DV (see separate literature for details). Do not assume that the system is depressurised even when a pressure gauge indicates zero.

Temperature

Allow time for temperature to normalise after isolation to avoid the danger of burns and consider whether protective clothing (including safety glasses) is required.

Disposal

These products are recyclable. No ecological hazard is anticipated with the disposal of these products providing due care is taken.

2.1 Supply (Fig. 1)

37D

The 37D Spirax Sarco temperature control is supplied with the temperature control unit and valve packed separately, and should be assembled securing the control head to the valve by means of the three screws supplied.
The temperature control unit is fitted with a control system having a range most suitable for the temperature given on the order but it is not preset.

37DE

The 37DE Spirax Sarco temperature control is supplied as for the 37D but a solenoid operated valve is fitted in the pipe between the pilot valve and the main diaphragm chamber, i.e. in series with the normal pilot valve.
The purpose of the solenoid valve is to override the pilot valve thus causing the main valve to shut off. It can be controlled by any device capable of interrupting the supply of current to the solenoid coil such as a thermostat, pressure switch hand clock.
The solenoid is arranged to open the valve when the coil is energised so that whatever switching device is used it must be arranged to break the current to close the main valve. In this way the unit will always 'fail-safe' i.e. will close the main valve in the event of a failure in electrical supply.

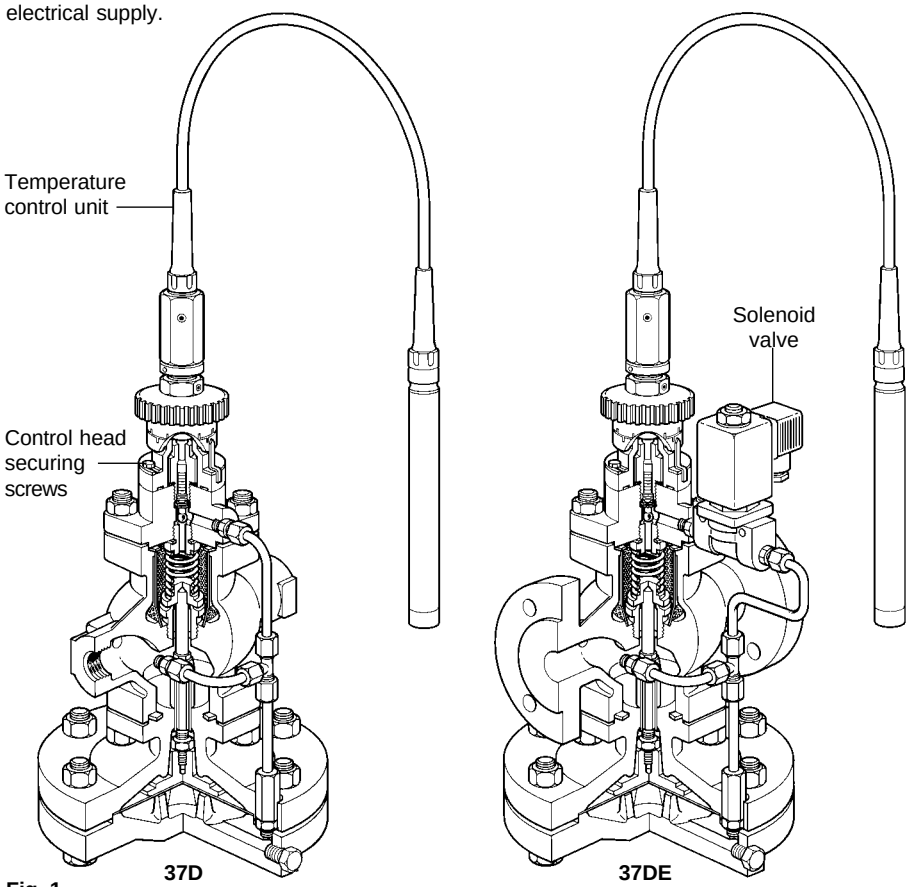

Fig. 1

Electrical supply
It is important that the solenoid is connected to the correct voltage. The standard unit is suitable for 110 Vac or 230 / 250 Vac 50 Hz supply, but units for other ac voltages may be supplied to special order, therefore always check on the supply details which are stamped on the solenoid valve name-plate before attempting to connect up.
Electrical connection is by cable plug to DIN 43650. Remember that the valve is on a steam supply line and in use will get hot. All wiring, connectors, etc. in close proximity to the valve should therefore be of heat resisting type.

Earth
The solenoid valve should be adequately earthed.

Maximum pressure
When converted to the 37DE by the addition of the solenoid valve, the Spirax Sarco temperature control is limited to a maximum pressure of 9.6 bar (139 psi).

2.2 General arrangement
Fig. 2 shows the recommended installation layout to ensure satisfactory operation of the Type 37D and 37DE temperature control. It should always be fitted in a horizontal pipeline with the main diaphragm chamber below the line.

2.3 Pipeline sizing
The piping on both sides of the valve must be sized so that velocities do not exceed 30 m/s (98 ft/s). This means that a properly sized valve will often be smaller than the connecting pipework.

2.4 Pipeline stresses
Line stresses such as could be caused by expansion or inadequate support should not be imposed on the valve body.

2.5 Isolating valves
These should preferably be of the fullway type.

2.6 Removal of condensate
Ensure that the pipework is adequately drained so that the valve is supplied with dry steam. The ideal arrangement is to fit a separator in the steam supply. If the steam is known to be dry then a drain pocket may be adequate.
If there is a rise in the low pressure line from the valve then a further drain point should be provided to keep the valve drained after shutdown.

2.7 Preventing dirt
The valve should be protected by a pipeline strainer with 100 mesh screen. The strainer should be fitted on its side to prevent the accumulation of water.

2.8 Temperature ranges
The temperature control system is available in five temperature ranges as follows:-

Range A	16°C to 49°C	(61°F - 120°F)
Range B	38°C to 71°C	(100°F - 160°F)
Range C	49°C to 82°C	(120°F - 180°F)
Range D	71°C to 104°C	(160°F - 219°F)
Range E	93°C to 127°C	(199°F - 261°F)

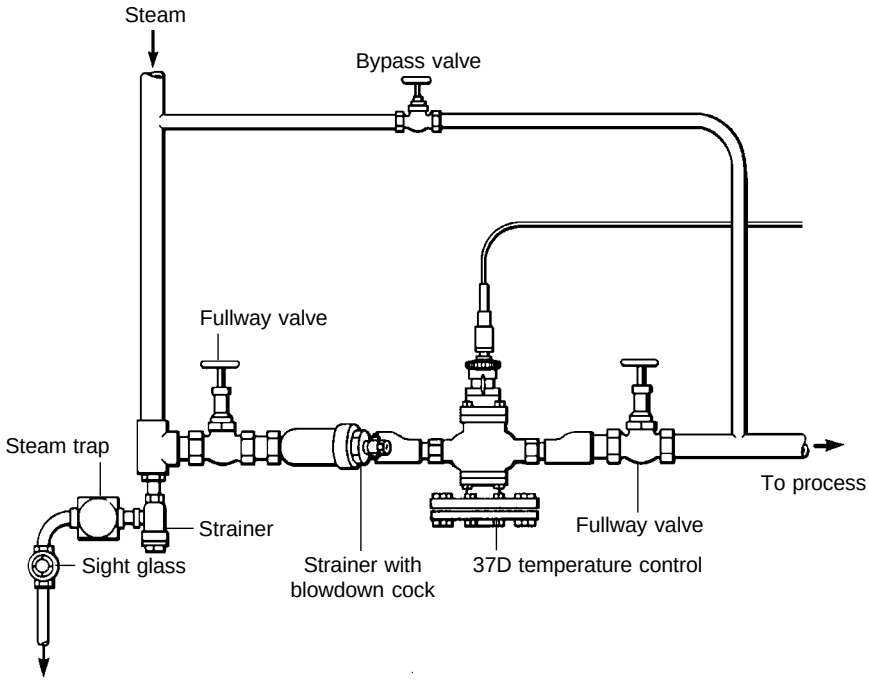

Recommended installation

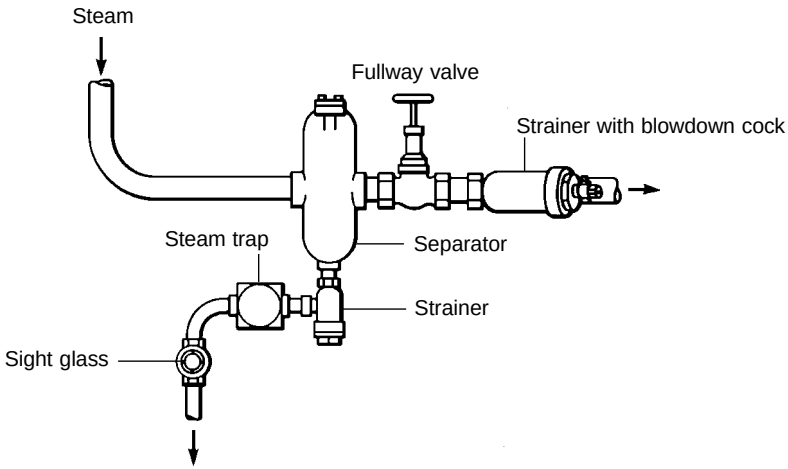

Fig. 2 Alternative installation fitted with a separator

2.9 Sensor bulb

The type 37D control is fitted with a plain bulb as in Fig. 3, but as standard this bulb is supplied with an adaptor shown in Fig. 4, consisting of a union nipple (**U**), 'O' ring (**V**) and gland nut (**W**).

2.10 Use of plain bulb

Where it is desired to use a plain bulb as in Fig. 3 the adaptor can be removed by unscrewing the gland nut (**W**) from the union nipple Fig. 4 and withdrawing each piece of the assembly separately over the bulb.

2.11 Use of immersion bulb

Where it is desired, insert the bulb into a vessel under pressure. Unscrew the gland nut (**W**) from the union nipple (**U**). This will enable the union nipple to withdraw over the bulb.
The union nipple can now be screwed into the tapping provided at the temperature sensing point. The union nipple is normally threaded ¾" BSP but may be ¾" NPT if specially ordered.
Insert the bulb through the union nipple (**U**) until the 'O' ring (**V**) seats in the union nipple as shown in Fig. 4 and screw home the gland nut (**W**) to compress the 'O' ring. The gland nut needs to be little more than finger tight. Do not overtighten otherwise damage to the 'O' ring will result.

2.12 Pockets

In all cases where the temperature sensing point is in a fluid under pressure it is best to use a pocket so that the bulb can be withdrawn for servicing without draining down the plant.
Pockets must also be used where the medium being controlled would attack and destroy the material from which the bulb is constructed.
The top of the pocket is formed exactly as the union nipple and should be screwed into the tapping (¾" BSP or ¾" NPT) provided at the temperature sensing point.
Insert the bulb into the pocket until the 'O' ring seats in the union nipple as Fig. 5, and screw home the gland nut (**W**) to compress the 'O' ring.
The gland nut (**W**) will be little more than finger tight. Do not overtighten otherwise damage to the 'O' ring will result.

Fig. 3

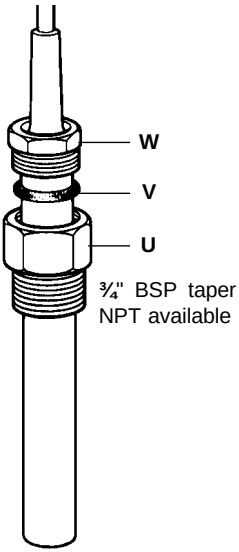

Fig. 4

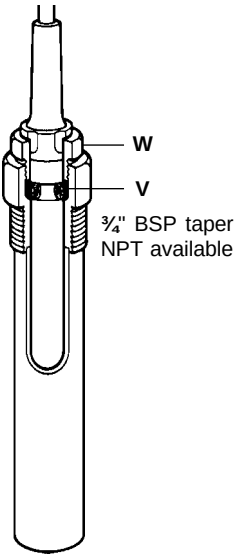

Fig. 5

2.13 Extra long pockets

Where extra long pockets are used the plain bulb should be used and inserted the full length of the pocket.
A split bung is provided to seal the top of the pocket Fig. 6.

2.14 Heat conduction

Where a bulb is used in a pocket the pocket should be filled with a heat conducting fluid, such as thin oil or water, to improve heat transfer.
Do not fill the extended pocket Fig. 6, above the level of the bulb.

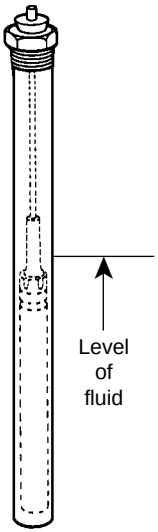

Fig. 6

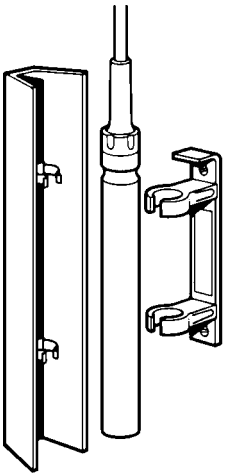

Fig. 7

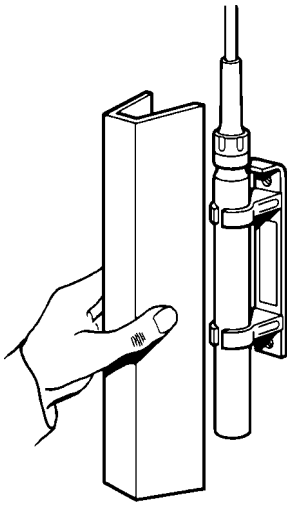

Fig. 8

2.15 Wall mounting sensor

Where the type 37D control is to be used to control from room temperature the plain bulb Fig. 3 is used and a bracket and protective shield is provided Fig. 7.
It is essential that the sensor be fitted in such a position that it can sense the true room temperature and is not influenced by draughts.
It is preferably fitted in the vertical position and can be fitted either with the capillary leading from top of the sensor or leading from the bottom.
Having decided on the sensor position fix the bracket to the wall making sure that it is fitted in such a way that the lug standing proud of the base will engage with the groove turned in the sensor.
After inserting the sensor in the clips, fit the external cover as in Fig. 8.

3.1

When the valve is installed and the control system is fitted with the bulb in the medium to be controlled it may be brought into operation as follows.
In most new installations dirt collects in the steam line during construction. It is always advisable to blow this out on initial start-up.
Remove the cap on the strainer before the steam trap, crack open the steam supply blowdown to clear dirt, shut-off and replace cap.
It is essential that the screen in the main line strainer is not removed during this operation.
If a blowdown cock is fitted to the strainer cap as mentioned in Section 2 it can be opened to blow out the dirt without removing the cap.

3.2

Check that the temperature scale can be easily seen.
If it is fitted in a confined space facing a wall for example the control head may be repositioned to enable the scale to be more easily read as follows:-
Undo the three screws. The control head may now be turned through 120° or 240° and the screws tightened up.

3.3

By turning the knurled knob, set the scale opposite the pointer to the temperature at which it is desired to control. (Where it is essential that this temperature is not exceeded it is advisable to set the control initially some 6°C (43°F) lower and bring the plant up to temperature slowly).

1. Put the plant in operation in the normal way allow 30 minutes for it to settle down, then check the temperature against a reliable thermometer - this check reading should be taken as close to the control point as possible to ensure that both the thermometer and the sensor bulb are sensing similar conditions.
2. Compare the thermometer reading with the scale reading on the temperature control.
3. This may be found to differ by a few degrees and if precise control is required can be adjusted by resetting the pointer as follows:
4. Holding the control head tightly onto the pilot valve housing - slacken the three screws, just sufficiently to enable the pointer to be moved to the right or left until the temperature indicated on the scale corresponds with the actual temperature as shown on the sensor. Whilst making this adjustment it is essential to hold the control head tightly onto the pilot valve housing otherwise not only will movement of the pointer be difficult but allowing the head to lift will open the pilot valve.
5. Tighten the three screws.
6. The adjustment knob may now be reset to the required temperature. Adjustments to raise or lower the temperature may be freely made without damage to the control system.

Important
Direct injection systems

This product contains a rust inhibitor to protect it against corrosion during storage. To avoid any possible contamination of your product, after first blowing down the approach pipework, we recommend that the valve is blown through thoroughly in order to remove any trace of the inhibitor.

4.1 Routine maintenance

It is recommended that the valve is dismantled once every twelve to eighteen months for a complete overhaul and ideally this should be carried out with the valve removed from the line.

The parts that may require replacing or refurbishing are listed below:

- Main valve seat and valve head.
- Main valve screen.
- Pilot valve assembly.
- Main diaphragms.

Safety warning:

The body gasket contains a thin stainless steel support ring which may cause physical injury if not handled and disposed of carefully.

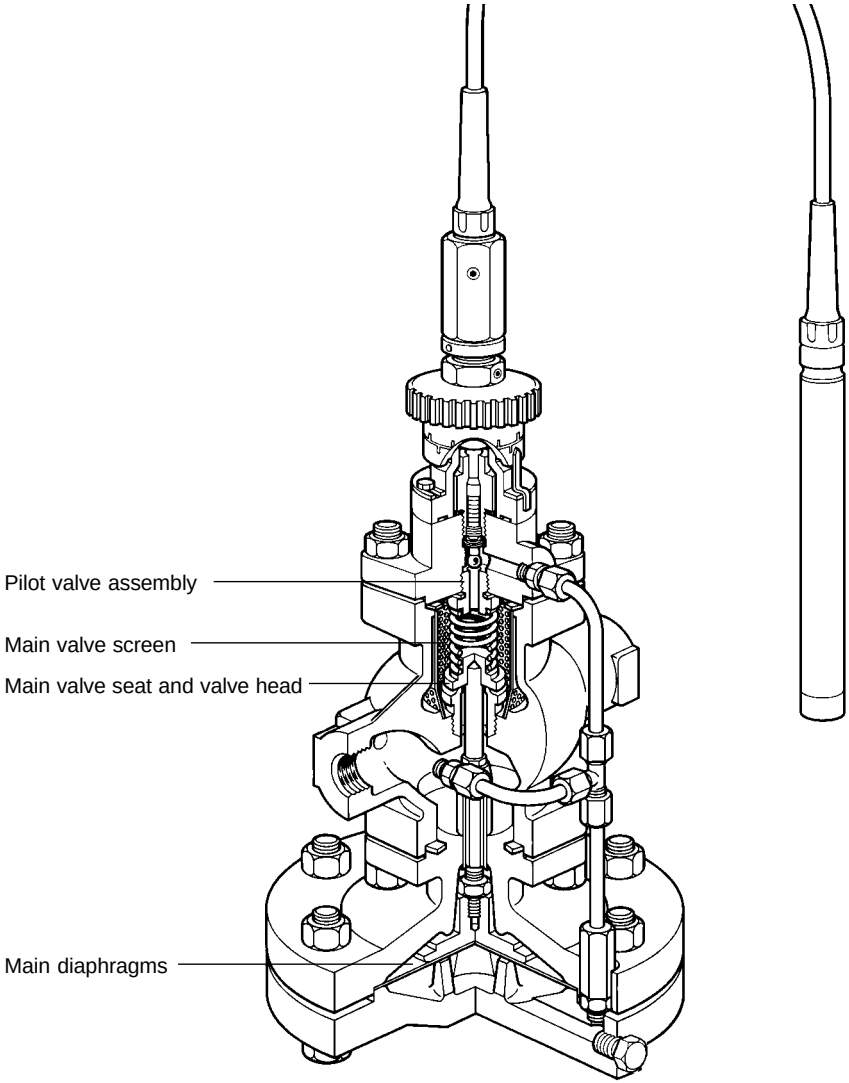

To renew the pilot valve assembly

Isolate the valve and zero the pressure. If the plant is still in operation through a bypass valve or if the medium surrounding the bulb is hot, withdraw the sensor bulb and allow it to cool down, otherwise the control system may be strained.

1. Undo the three screws and lift of the adjustment head.
2. Unscrew the packless gland housing (21 mm A / F) and remove with the push rod assembly and return spring.
3. Unscrew the union and release the pipework.
4. Unscrew the nuts and remove the pilot valve housing.
5. Ensure that the main valve return spring is still in position.
6. Unscrew and remove the pilot valve assembly (20 mm A / F).
7. Screw the new pilot valve into the housing.

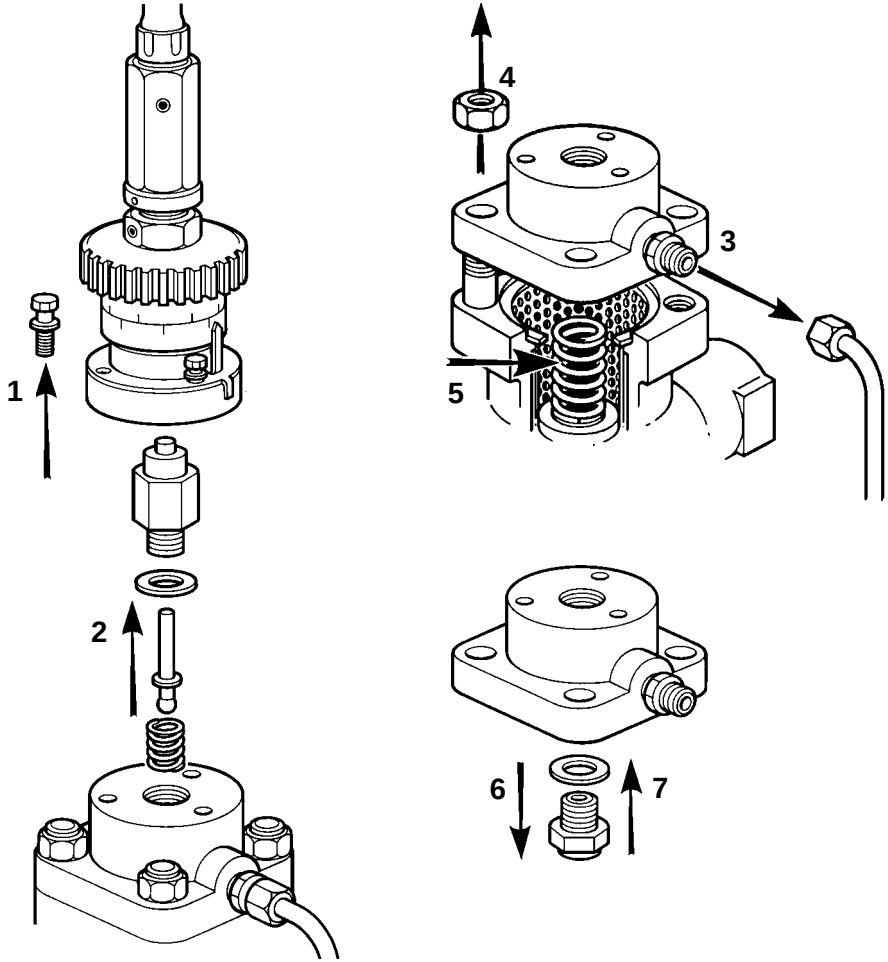

8. Remove the screen and clean.
9. Ensure the main valve return spring is still in position.
10. Fit the new gasket.
11. Replace the screen.
12. Assemble the pilot valve housing and tighten the nuts to the torques shown in Table 1.
13. Refit the pipework and retighten the unions to ensure a steam tight seal.
14. Fit a new push rod assembly with return spring and replace the packless gland housing, tighten to 40 N m (30 lbf ft).
15. Refit the adjustment head. Bring the valve back into commission by following as many steps as are necessary in Section 3.

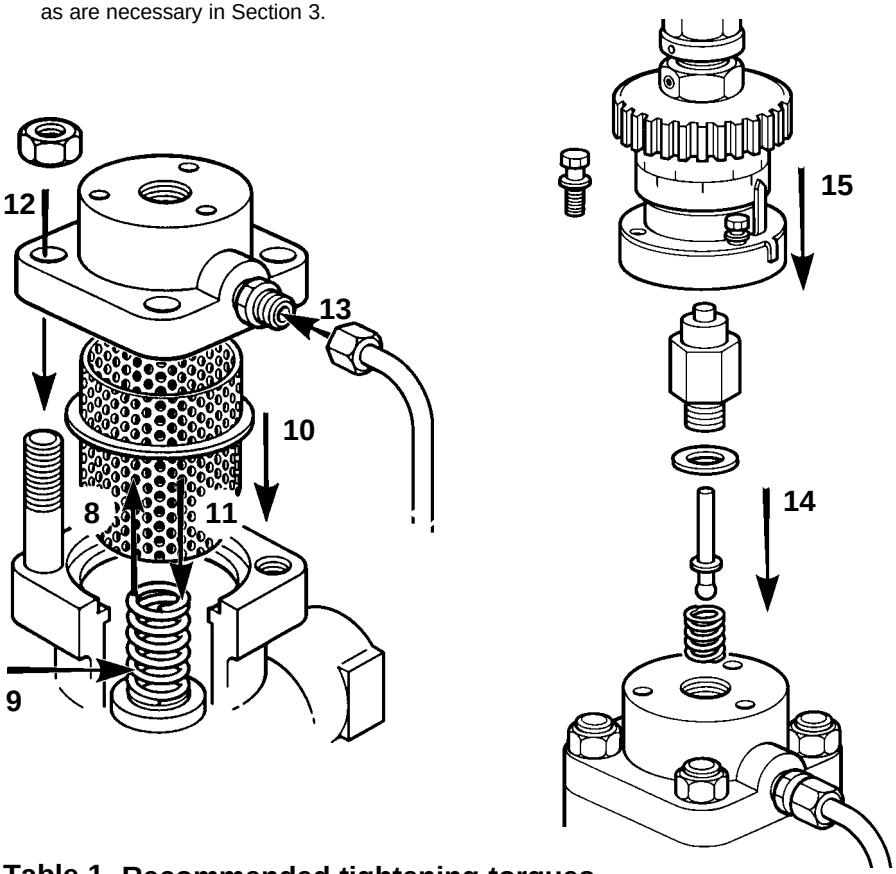

Table 1 Recommended tightening torques

Size of valve	Nut size	Tightening torques
½", ¾", 1" **DN15, 20, 25 and 32**	M10	40 N m (30 lbf ft)
DN40 and 50	M12	45 N m (33 lbf ft)

After fitting a new pilot valve seat and push rod it will be necessary to check the temperature control points (see Section 3.3).

To clean the strainer

Isolate the valve and zero the pressure. If the plant is still in operation through a bypass valve or if the medium surrounding the bulb is hot, withdraw the sensor bulb and allow it to cool down, otherwise the control system may be strained.

16. Unscrew the unions and release pipework.

17. Unscrew the nuts.

18. Remove the pilot valve housing complete with the adjustment head.

19. Remove the screen and clean.

20. Ensure the gasket faces are clean.

21. Check that the main valve return spring is in position.

22. Fit a new gasket.

23. Replace the screen.

24. Assemble the pilot valve housing complete with the spring housing assembly and tighten the nuts to the torques shown in Table 1, page 11.

25. Refit the pipework and retighten the unions to ensure a tight seal. Bring the valve back into commission by following as many steps as necessary in Section 3.

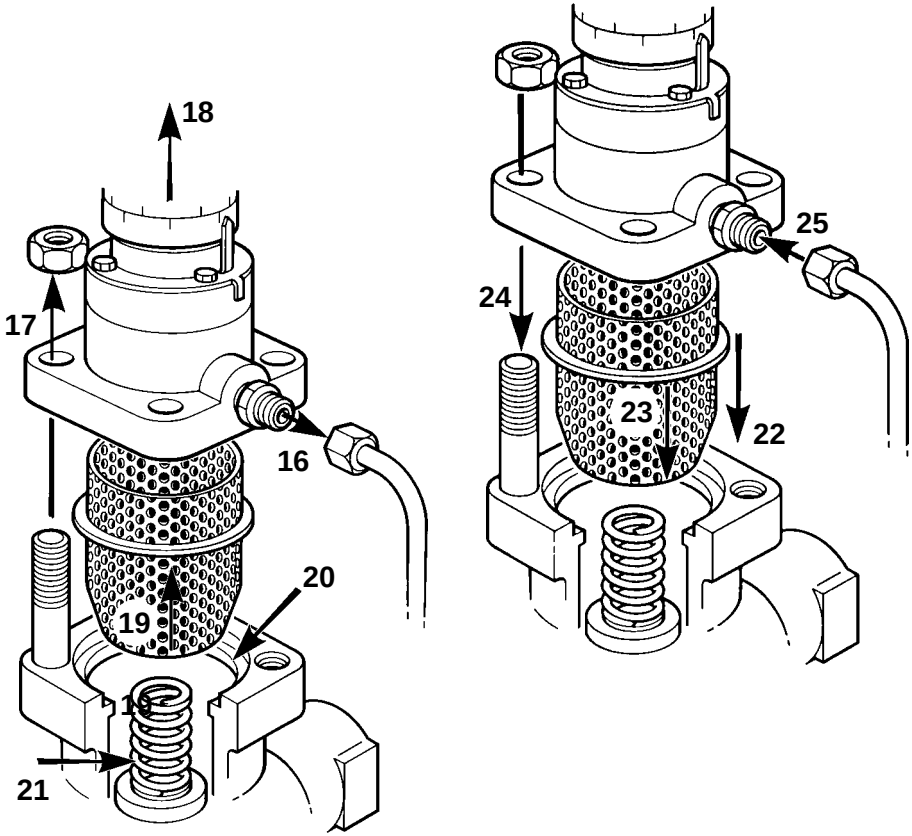

To renew or clean the main diaphragms

Isolate the valve and zero the pressure. If the plant is still in operation through a bypass valve or if the medium surrounding the bulb is hot, withdraw the sensor bulb and allow it to cool down, otherwise the control system may be strained.

26. Undo the long union nut and pull away.

27. Undo the M12 nuts and bolts.

28. Drop away the lower diaphragm chamber, the two diaphragms, diaphragm plate and push rod assembly.

29. Thoroughly clean the lower diaphragm chamber making sure the contact faces are clean.

30. Replace the diaphragm plate and push rod assembly and loosely fit the lower diaphragm chamber on two bolts either side of the union connection to locate spigot in recess.

31. Bring the two new diaphragms together (where precoated sealant is applied this should face outwards) and slide into position. If diaphragms are not renewed, but cleaned only care must be taken to replace diaphragms in the original order.

32. Push the lower diaphragm chamber home to locate in the recess and refit M12 nuts and bolts. Progressively and evenly tighten to a torque of 80 - 100 N m (59 - 74 lbf ft).

33. Retighten the long union nut to ensure a steam tight seal. Bring the valve back into commission by following as many steps as are necessary in Section 3.

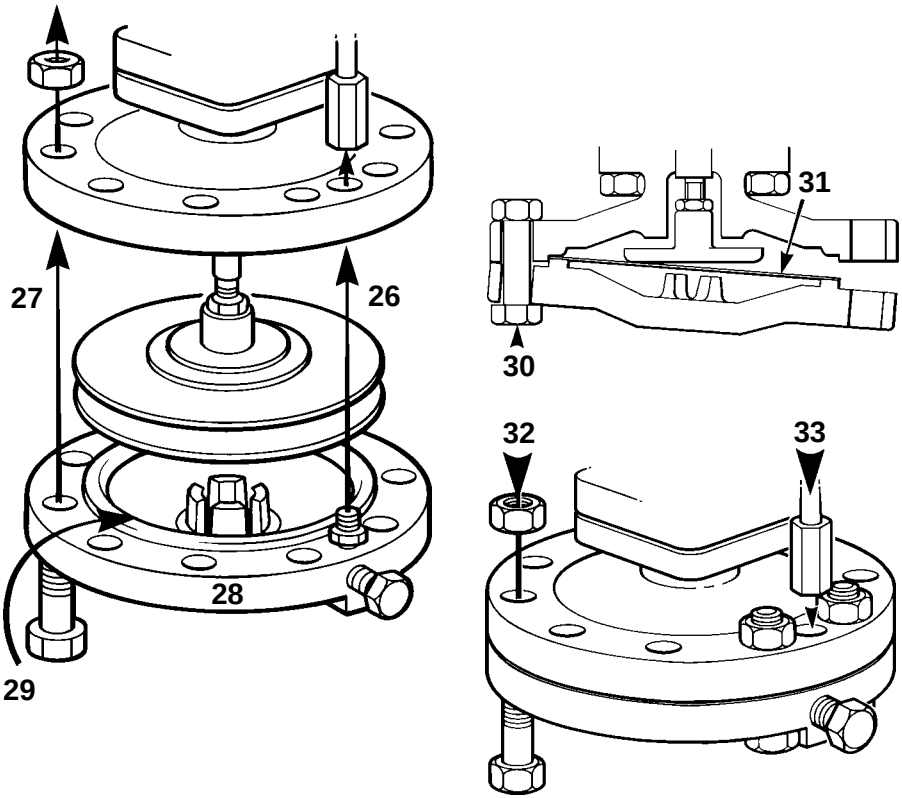

To service or renew the main valve and seat

Isolate the valve and zero the pressure. If the plant is still in operation through a bypass valve or if the medium surrounding the bulb is hot, withdraw the sensor bulb and allow it to cool down, otherwise the control system may be strained.

34. Unscrew the unions and release pipework.

35. Unscrew the nuts.

36. Remove the pilot valve housing, complete with the spring housing assembly.

37. Remove the screen and clean.

38. Remove the main valve spring and the main valve head.

39. Remove the main valve seat. Examine the faces of the main valve head and seat. If they are only slightly worn both the main valve head and main seat may be lapped on a flat plate using a fine grinding paste. If either is badly worn or unfit for further use they will need to be replaced.

40. Refit the valve seat and tighten to the recommended torque shown in Table 2. Where a new part has been fitted it will be necessary to reset the main valve push rod to give the correct valve lift. To do this it is necessary to expose the main diaphragm plate and push rod assembly.

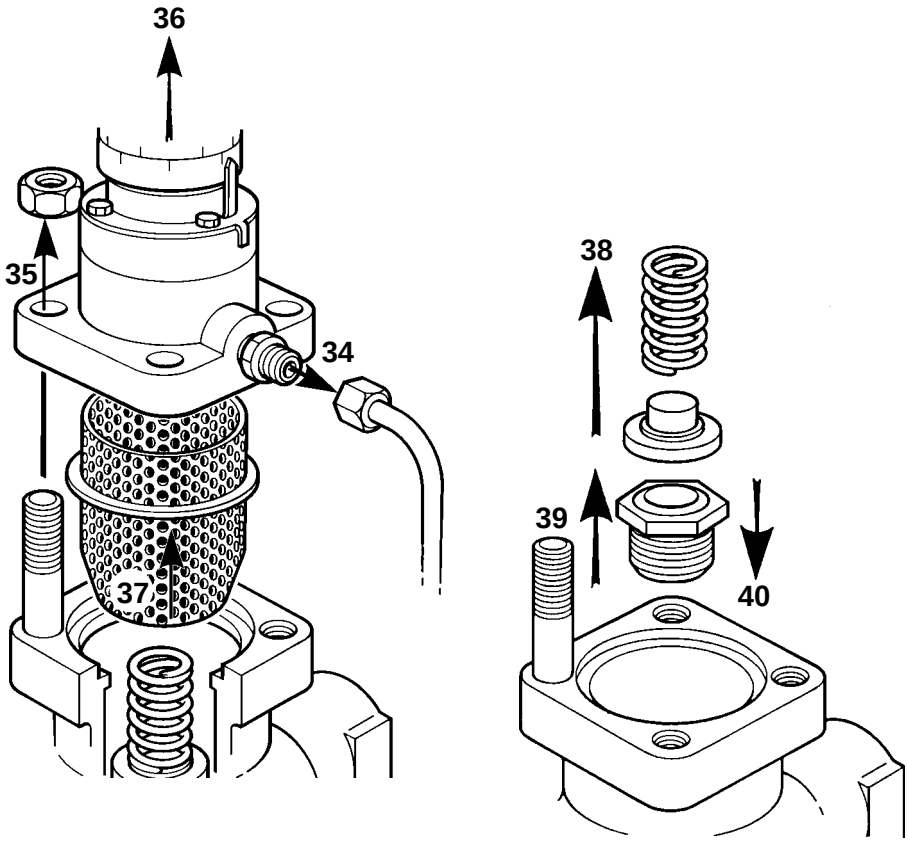

Table 2 Recommended tightening torques for main seat

Size of valve	Width across flats	Tightening torque
½", ½" LC, DN15 & DN15LC	30 mm (1.18") (external)	110 - 120 N m (81 - 89 lbf ft)
¾" & DN20	36 mm (1.42") (external)	140 - 150 N m (103 - 111 lbf ft)
1" & DN25	19 mm (0.75") (inside)	170 - 180 N m (125 - 133 lbf ft)
DN32	24 mm (0.94") (inside)	200 - 210 N m (148 - 155 lbf ft)
DN40	30 mm (1.18") (inside)	230 - 240 N m (170 - 177 lbf ft)
DN50	41 mm (1.61") (inside)	270 - 280 N m (199 - 207 lbf ft)

41. Undo the long nuts and pull away.

42. Undo the M12 nuts and bolts.

43. Drop away the lower diaphragm chamber, the two diaphragms, diaphragm plate and the push rod assembly.

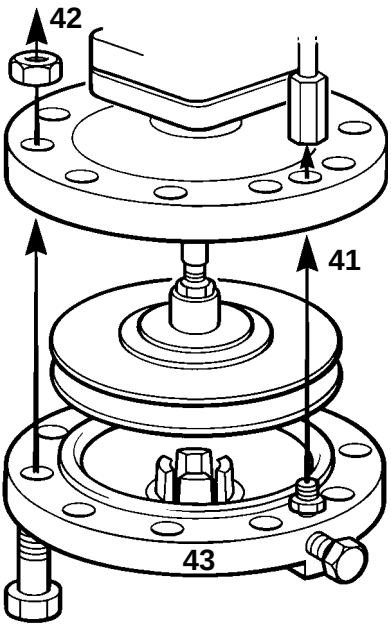

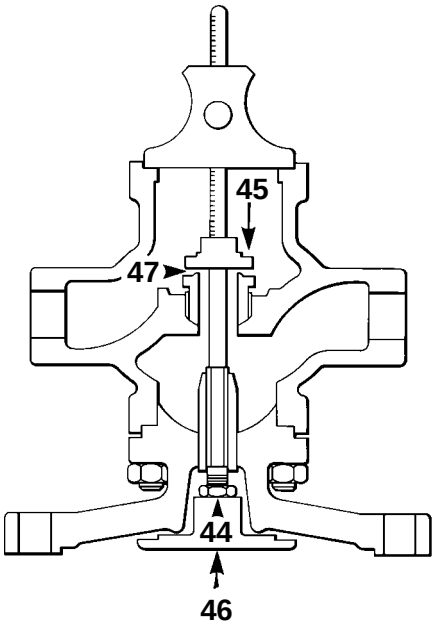

44. Refit the push rod assembly.

45. Refit the main valve head, make sure the valve locates on seat.

46. Open the valve by pushing onto the diaphragm plate until it comes up against the stop of the body.

47. Check the valve lift (shown in Table 3) using a depth gauge.

Table 3 Valve lift

Size of valve	DN15LC	DN15	DN20	DN25	DN32	DN40	DN50
Lift	2.0 mm (0.08")	2.0 mm (0.08")	2.5 mm (0.10")	3.0 mm (0.12")	3.5 mm (0.14")	4.5 mm (0.18")	5.0 mm (0.20")

Adjust if necessary by screwing push rod in or out of diaphragm plate.

48. Thoroughly clean the lower diaphragm chamber making sure the contact faces are clean.

49. Replace the diaphragm plate and the push rod assembly and loosely fit the lower diaphragm chamber on two bolts either side of the union connection to locate the spigot in the recess.

50. Refit the diaphragms in exactly the same way as when dismantled.

51. Push the lower diaphragm chamber home to locate in the recess and refit the M12 nuts and bolts. Progressively and evenly tighten to a torque of 80 - 100 N m (59 - 74 lbf ft).

52. Retighten the long union nut to ensure a steam tight seal.

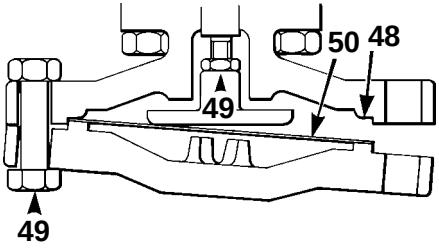

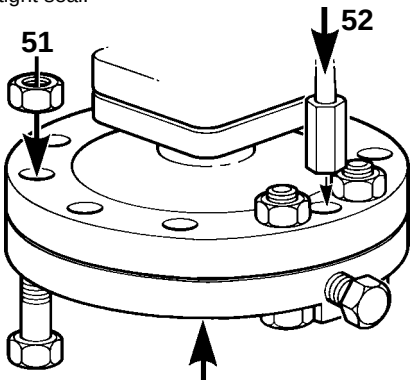

53. Ensure the gasket faces are clean.

54. Refit the main valve head.

55. Replace the main valve return spring.

56. Fit a new gasket.

57. Replace the screen.

58. Assemble the pilot valve housing complete with the spring housing assembly and tighten the nuts to the recommended torques shown in Table 1, page 11.

59. Refit the pipework and retighten the unions to ensure a tight seal. Bring the valve back into commission by following as many steps as necessary in Section 3.

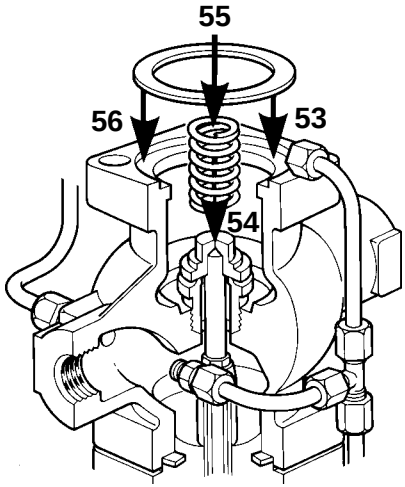

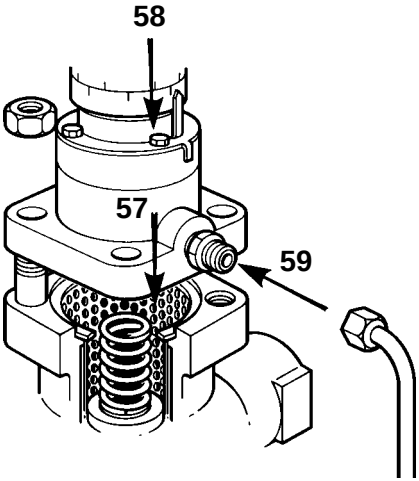

To renew the temperature control system

Isolate the valve and zero the pressure. If the plant is still in operation through a bypass valve or if the medium surrounding the bulb is hot, withdraw the sensor bulb and allow it to cool.

60. Undo the three screws and lift off the adjustment head.

61. Fix in position the adjustment head of the replacement thermostatic system. Take care that the limit stop of the pointer ring is properly located in the slot.

62. Retighten the screws.
Bring the valve back into commission by following as many steps that are necessary in Section 3.
With a replacement thermostatic system it may be found that the points cannot be moved far enough to reach the desired reading on the scale when the medium around the bulb is at the correct temperature.
If this is so, resetting of the calibration can be carried out using the special spanner supplied with each replacement sensor.

63. Fix the pointer in the mid-position of its adjustment and set the scale to indicate the required temperature.

64. Tighten up the screws.

65. Hold the sleeve with a pair of pliers and loosen the locking ring, using the special spanner.

66. Still holding the sleeve with the pliers, turn clockwise if the temperature of the medium being controlled is too high or anticlockwise if too low.

67. After resetting, tighten up the locking ring with special spanner.

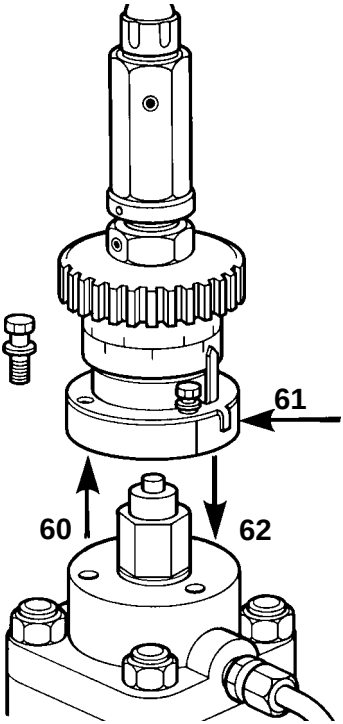

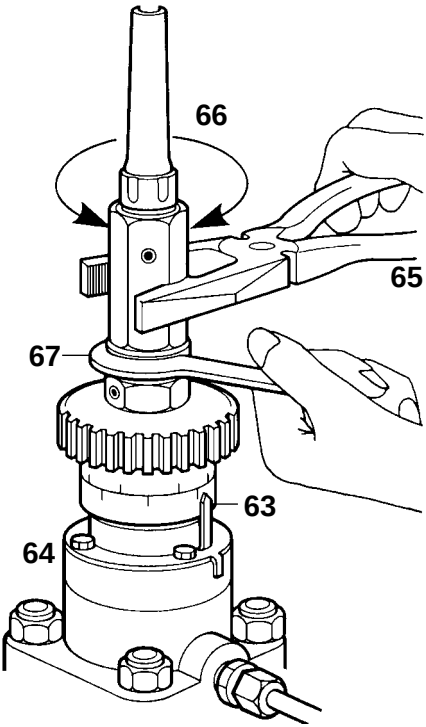

To service or renew solenoid valve (37DE)

68. Remove the retaining nut, washer and seal and slip the entire solenoid enclosure off the solenoid base and sub-assembly or plugnut/core tube sub-assembly.

69. Unscrew the bonnet or solenoid base sub-assembly and remove the core spring, core assembly and body gasket. All parts are now accessible for cleaning replacement. Replace worn or damaged parts with a complete Spare parts kit (item **W** pages 20 and 21) for best results.

70. Reassemble in reverse order paying careful attention to the exploded views provided.

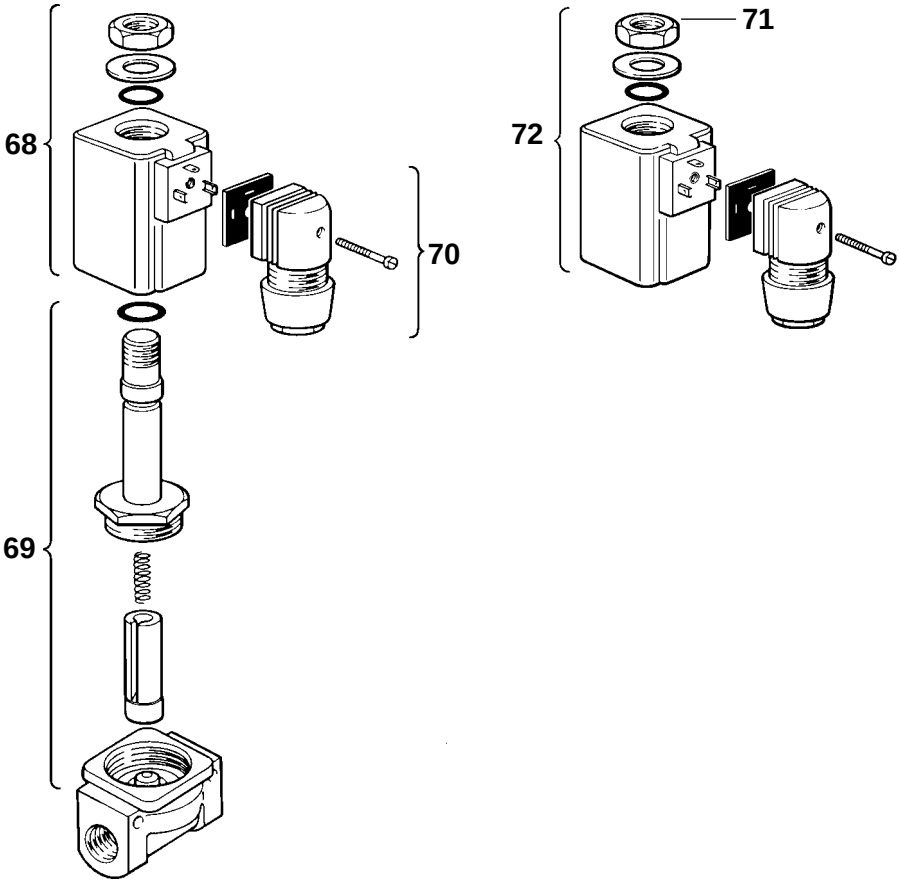

Coil replacement

Switch off electrical power supply and disconnect coil lead wires.

71. Undo retaining nut.

72. Slip washer, insulating washers and coil off solenoid base sub-assembly. Reassemble in reverse order.

CAUTION

Solenoid must be fully reassembled as the housing is part of, and completes the magnetic circuit.

Interchangeability of spares

The following table shows how in certain sizes some parts are interchangeable. For example in the line headed 'Main diaphragm' the diaphragm used in the screwed valves ½" and ¾" is common to these sizes by the letter 'a', the letter 'c' indicates that one diaphragm is common to the DN40 and DN50 valves. All spares marked † are interchangeable with the DP17 pressure reducing valve.

		Screwed				Flanged						
	Size DN	**½"LC**	**½"**	**¾"**	**1"**	**15LC**	**15**	**20**	**25**	**32**	**40**	**50**
	Maintenance kit	a	a	a	b	f	f	a	b	c	d	e
†	**Main diaphragm**	a	a	a	b	a	a	a	b	b	c	c
	Pilot valve assembly	a	a	a	a	a	a	a	a	a	a	a
	Pilot valve packless gland set	a	a	a	a	a	a	a	a	a	a	a
†	**Main valve assembly**	a	b	c	d	a	b	c	d	e	f	g
†	**Internal strainer**	a	a	a	b	f	f	a	b	c	d	e
†	**Main valve return spring**	a	a	a	a	a	a	a	a	a	c	c
	Control head	a	a	a	a	a	a	a	a	a	a	a
	'O' ring for sensor buld adaptor	a	a	a	a	a	a	a	a	a	a	a
†	**Control pipe assembly**	a	a	a	b	f	f	a	b	c	d	e
†	**Gasket set**	a	a	a	a	a	a	a	a	a	b	b
	Set of pilot valve housing securing studs and nuts	a	a	a	a	a	a	a	a	a	b	b
†	**Set of main body studs and nuts**	a	a	a	a	a	a	a	a	a	b	b
†	**Set of diaphragm securing bolts and nuts**	a	a	a	a	a	a	a	a	a	b	b
	Set of control head securing screws	a	a	a	a	a	a	a	a	a	a	a

Spare parts

Spare parts are available as indicated. No other parts are supplied as spares.

Available spares

	Maintenance kit A stand-by set of spares for general maintenance purposes which covers all spares marked*			
*	Main diaphragm		(2 off)	**A**
	Pilot valve assembly			**B**, **C**, **D**, **E**
*	Pilot valve packless gland set			**H**, **J**
	Main valve assembly			**K**, **L**
*	Internal strainer			**M**
*	Main valve return spring			**N**
	Control head	**Range A** 16°C - 49°C	(61°F - 120°F)	**Z** (3 off), **Y**
		Range B 38°C - 71°C	(100°F - 160°F)	
		Range C 49°C - 82°C	(120°F - 180°F)	
		Range D 71°C - 104°C	(160°F - 219°F)	
		Range E 93°C - 127°C	(199°F - 261°F)	
	Note: When ordering state the range and length of capillary tube. Normally stocked in capillary lengths of 2 m. Available in multiples of 2 m up to a maximum of 14 m (at extra cost).			
	'O' ring for sensor bulb adaptor		(3 pieces)	**U**
*	Control pipe assembly			**P**
*	Gasket set		(3 off)	**R**
	Set of pilot valve housing securing stud and nuts		(set of 4)	**S**
	Set of main body studs and nuts		(set of 4)	**T**
	Set of diaphragm securing bolts and nuts	Valve sizes DN15 - 32	(set of 10)	**V**
		DN40 and 50	(set of 12)	
	Set of control head securing screws		(set of 3)	**Y**

Type 37DE only

Solenoid valve complete		**W**
Replacement coil		**X1**
Valve seat and core assembly		**X2**

How to order spares

Always order spares by using the description given in the column headed 'Available spares' and state the size and type (37D or 37DE) of temperature control and whether it is screwed or flanged.

Example: 1 - Main valve assembly for a DN25 Spirax Sarco Type 37D temperature control.

Note: To provide a stand-by set of spares for general maintenance purposes, an order for 1 maintenance kit will cover all spares marked*.

Note
A split pin is fitted in this connector. If the latter is removed for any reason, it is essential that the split pin is retained and refitted.

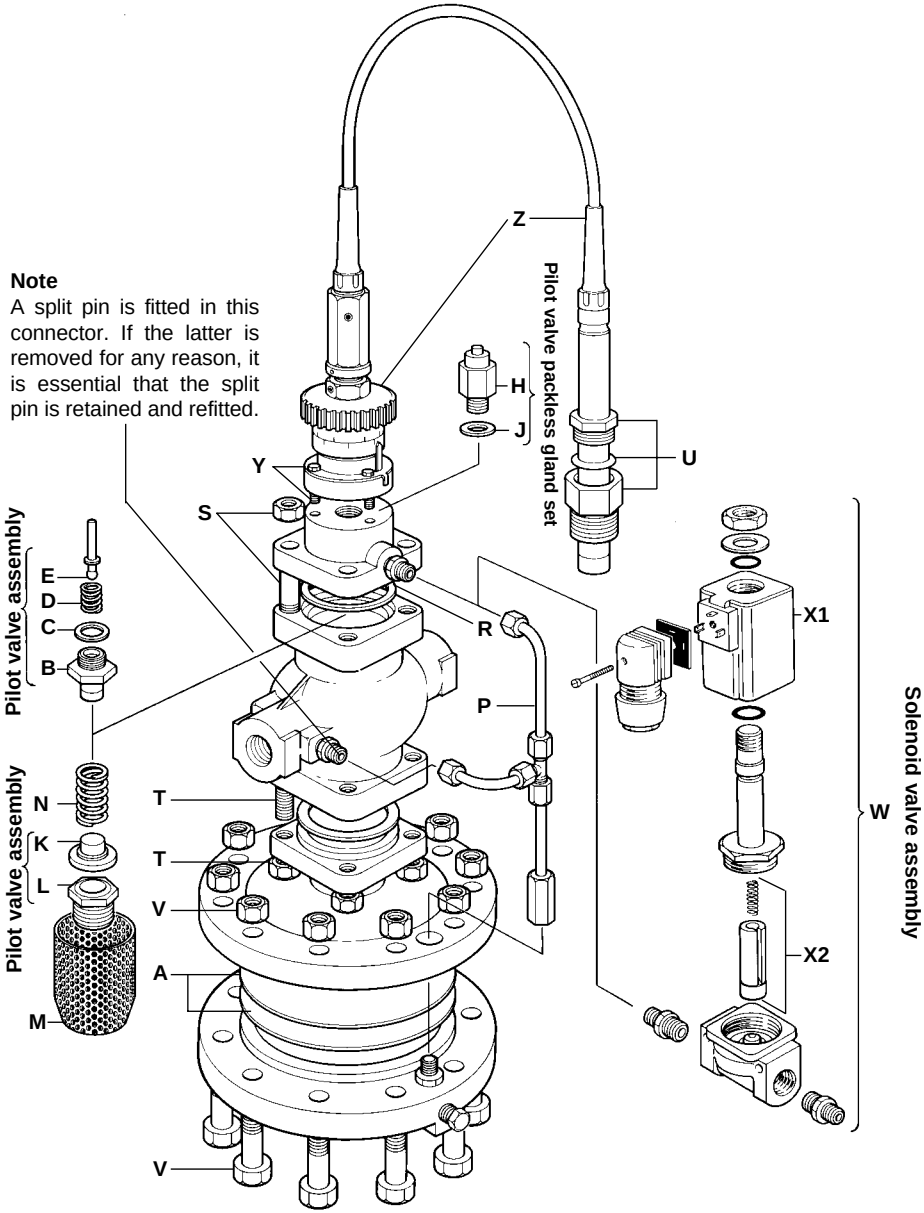

6. Fault finding

6.1 Preliminary procedure

Before undertaking the following fault finding procedure, ensure the valve has been isolated and that upstream and downstream pressures are zero. Possible fault checks are given in a logical order below.

6.2 Temperature in plant too high

6.2.1 A rise in temperature above the normal control setting could be caused either by the valve failing to shut off or a breakdown in the control system. Check as follows:

6.2.2 With the plant up to temperature and steam on the valve remove the sensor bulb and allow to cool. Undo the three screws and remove the adjustment head.
This will release all pressure on the pilot valve plunger so that valve should be in the open position.

6.2.3 This plunger can be depressed and released by hand to check the operation of the valve, depression of the plunger causing the main valve to close and the temperature in the plant to fall.

6.2.4 If this check indicates that the valve is closing properly the fault must lie in the control system which should be replaced as Section 4, Steps 60 to 67.
If the check shows that the valve is not closing properly this could be caused by one of the following:

- Control orifice is blocked. For access remove pipe assembly and clear orifice with fine wire. (Do not use a drill or any other tool which will enlarge this orifice).
- Pilot valve is not seating. Examine and clean. For access see Section 4, Steps 1 to 15. Before stripping down to check on either pilot or main valves see Section 6.3.1 which follows.
- Main valve is not seating or the main valve push rod is sticking. Examine and clean. For access see Section 4, Steps 34 to 59.
  Before stripping down to check on either pilot or main valves see Section 6.3.1 which follows.

6.3 To check on valve closure

6.3.1 With the plant up to temperature isolate the valve and zero pressure.

6.3.2 Turn the adjustment knob to a lower temperature to enure that the main valve should be fully closed.

6.3.3 Undo pipe union in pilot valve housing.

6.3.4 Turn steam on to valve slowly.

6.3.5 If steam is discharged through the tapped hole in the pilot valve housing from which the union has been screwed, it indicates that the pilot valve is failing to seat. (See Section 4, Steps 1 to 15. If steam is discharged through the exposed end of the copper pipe it indicates that the main valve is failing to seat. (See Section 4, Steps 34 to 59).

6.4 Temperature in plant too low

6.4.1 If the temperature in the plant is below the normal control setting this could be caused by one of the following:

6.4.2 Lack of steam supply. Check that the steam is turned on and that the strainers are clean.

6.4.3 Pipe assembly blocked. Remove by uncoupling unions and blow through to clear obstruction.

6.4.4 Diaphragm fractured.

6.5 Pilot valve packless gland leaking

6.5.1 If, with the adjustment head removed and steam on the valve, steam is seen to be leaking from the top of the hexagon nut it indicates failure of the packless gland. Replace as Section 4, Steps 1, 2, 14 and 15.