AVS32 Stainless Steel Air Vent for Steam Systems

Installation and Maintenance Instructions

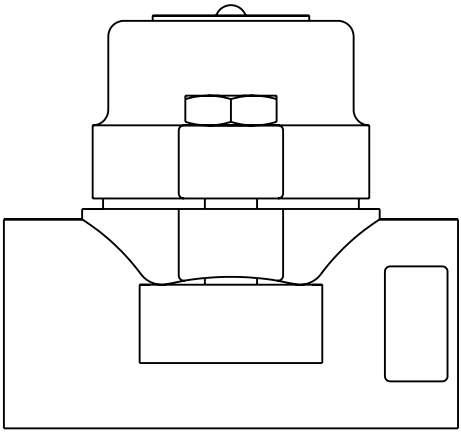

1. General safety information

Safe operation of the unit can only be guaranteed if it is properly installed, commissioned and maintained by a qualified person (see Section 11 of the attached Supplementary Safety Information) in compliance with the operating instructions. General installation and safety instructions for pipeline and plant construction, as well as the proper use of tools and safety equipment must also be complied with.

Warning

The body/cover gasket contains a thin stainless steel support ring which may cause physical injury if it is not handled and disposed of carefully.

Isolation

Consider whether closing isolating valves will put any other part of the system or personnel at risk. Dangers might include; isolation of vents and protective devices or alarms. Ensure isolation valves are turned off in a gradual way to avoid system shocks.

Pressure

Before attempting any maintenance consider what is or may have been in the pipeline. Ensure that any pressure is isolated and safely vented to atmospheric pressure before attempting to maintain the product, this is easily achieved by fitting Spirax Sarco depressurisation valves type DV (see separate literature for details). Do not assume that the system is depressurised even when a pressure gauge indicates zero.

Temperature

Allow time for temperature to normalise after isolation to avoid the danger of burns and consider whether protective clothing (including safety glasses) is required.

Disposal

The product is recyclable. No ecological hazard is anticipated with the disposal of this product providing due care is taken.

2. General product information

2.1 Description

The AVS32 is a stainless steel maintainable balanced pressure thermostatic air vent for use on steam systems. It has an integral flat strainer screen and straight connections. All pressure bearing components are produced by TÜV approved suppliers in accordance with AD-Merkblatt WO/TRD100.

Standards

This product fully complies with the requirements of the European Pressure Equipment Directive 97/23/EC.

Certification

This product is available with certification to EN 10204 3.1.B.
Note: All certification/inspection requirements must be stated at the time of order placement.

Note: For additional information see Technical Information Sheet TI-P123-16.

2.2 Sizes and pipe connections

½", ¾" and 1" screwed BSP or NPT.
½", ¾" and 1" socket weld ends to BS 3799.
½", ¾" and 1" butt weld ends to EN 12627.
DN15, DN20 and DN25 standard flange to EN 1092 PN40,
ANSI B 16.5 Class 150 and 300, JIS/KS 10K and JIS/KS 20K.

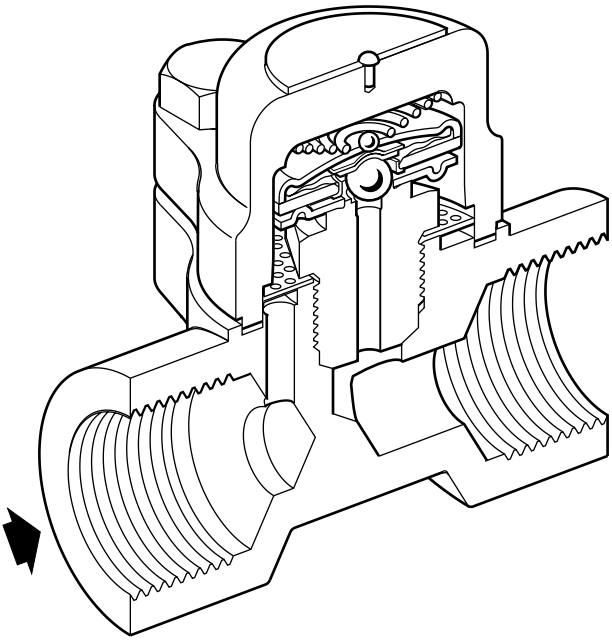

Fig. 1 AVS32

2.3 Pressure / temperature (ISO 6552)

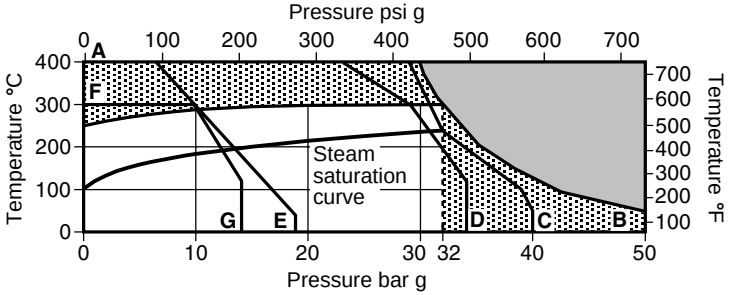

The product **must not** be used in this region.

The product should not be used in this region or beyond its operating range as damage to the internals may occur.

A - B Screwed, socket weld, butt weld and flanged ANSI 300.

A - C Flanged EN 1092 PN40.

A - D Flanged JIS / KS 20K.

A - E Flanged ANSI 150.

F - G Flanged JIS / KS 10K.

Body design conditions			PN40
PMA	Maximum allowable pressure	50 bar g @ 50°C	(725 psi g @ 122°F)
TMA	Maximum allowable temperature	400°C @ 35 bar g	(752°F @ 507 psi g)
Minimum allowable temperature		-200°C	(-328°F)
PMO	Maximum operating pressure for saturated steam service	32 bar g	(464 psi g)
TMO	Maximum operating temperature	300°C @ 32 bar g	(572°F @ 464 psi g)
Minimum operating temperature **Note:** For lower operating temperatures consult Spirax Sarco.		0°C	(32°F)
Designed for a maximum cold hydraulic test pressure of:		75 bar g	(1 088 psi g)

3. Installation

Note: Before actioning any installation observe the 'Safety information' in Section 1.

Referring to the Installation and Maintenance Instructions, name-plate and Technical Information Sheet, check that the product is suitable for the intended installation:

3.1 Check materials, pressure and temperature and their maximum values. If the maximum operating limit of the product is lower than that of the system in which it is being fitted, ensure that a safety device is included in the system to prevent overpressurisation.

3.2 Determine the correct installation situation and the direction of fluid flow.

3.3 Remove protective covers from all connections and the protective film from all name-plates, where appropriate, before installation on steam or other high temperature applications.

3.4 The AVS32 should be installed with the capsule in a horizontal plane with the cap at the top, and be positioned at the highest point of the main, or plant where the air collects. For maximum removal of air the discharge should be as free as possible, piped to a safe location (see Figure 2).

3.5 **The air vent should not be insulated.**

3.6 **Welding into the pipeline** - There is no need to remove the operating capsule from the product providing the welding is performed using the electric arc method. For specific weld procedures consult the relevant National and International welding standards.

3.7 Ensure adequate space is left to remove the cover from the body for maintenance. Minimum withdrawal distance is 37 mm (1½").

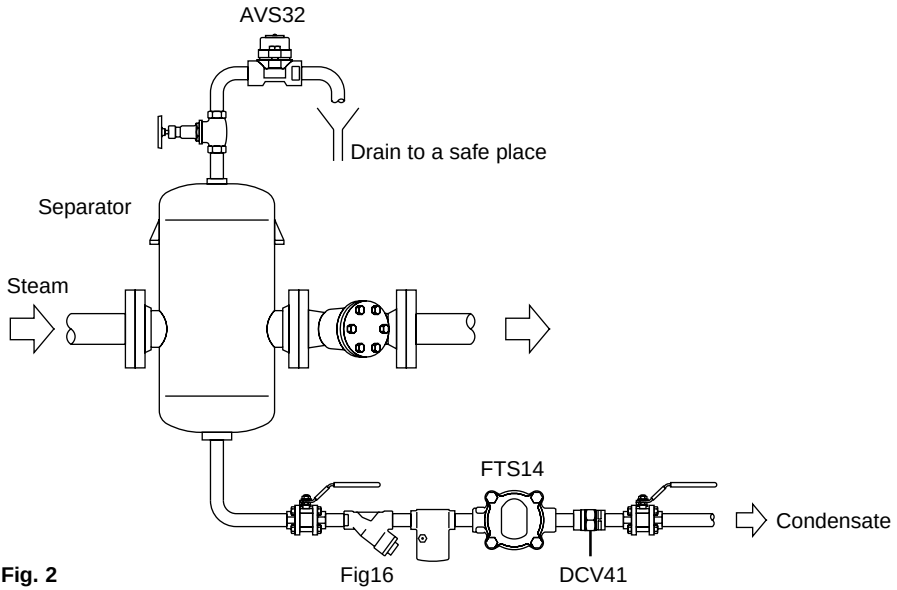

Fig. 2

4. Commissioning

After installation or maintenance ensure that the system is fully functional. Carry out tests on any alarms or protective devices.

5. Operation

The operating element is a capsule containing a small quantity of a special liquid with a boiling point below that of water. In the cold conditions that exist at start-up, the capsule is relaxed. The valve is off its seat and is wide open, allowing unrestricted removal of air. This is a feature of all balanced pressure traps / air vents and explains why they are well suited to air venting.

6. Maintenance

Note: Before actioning any maintenance programme observe the 'Safety information' in Section 1.

Warning

The body/cover gasket contains a thin stainless steel support ring which may cause physical injury if it is not handled and disposed of carefully.

6.1 General information

Before undertaking any maintenance on the air vent it must be isolated from the supply line, and any pressure allowed to safely normalise to atmosphere. The air vent should then be allowed to cool. When reassembling, ensure that all joint faces are clean.
Maintenance can be completed with the air vent in the pipeline, once the safety procedures have been observed. It is recommended that new gaskets and spares are used whenever maintenance is undertaken. Ensure that the correct tools and necessary protective equipment are used at all times. When maintenance is complete open the isolation valves slowly and check for leaks.

6.2 How to fit a new capsule and seat:

- Remove the cover (**1**) and spring (**17**) from the body (**8**) by unscrewing the two cover bolts (**9**).
- Remove the capsule (**2**) and spacer plate (**18**).
- Unscrew the valve seat (**3**) from the body (**8**).
- Clean or replace the strainer screen (**5**).
- Replace the valve seat (**3**) and tighten to the recommended torque (see Table 1).
- It is recommended to fit a new cover gasket (**7**) reassemble the spacer plate (**18**) ensuring that it is located centrally on the valve seat (**3**).
- Reassemble the capsule (**2**), spring (**17**) and cover (**1**).

Note: Care must be taken to ensure the cover bolts (**9**) are progressively tightened to the recommended torque (see Table 1).

6.3 How to clean or replace the strainer screen:

- Remove the cover (**1**) and spring (**17**) from the body (**8**) by unscrewing the two cover bolts (**9**).
- Remove the capsule (**2**) and spacer plate (**18**).
- Unscrew the valve seat (**3**) from the body (**8**).
- Clean or replace the screen (**5**) as required.
- Replace the valve seat (**3**) and tighten to the recommended torque (see Table 1).
- It is recommended to fit a new cover gasket (**7**), reassemble the spacer plate (**18**) ensuring that it is located centrally on the valve seat (**3**).
- Reassemble the capsule (**2**), spring (**17**) and cover (**1**).

Note: Care must be taken to ensure the cover bolts (**9**) are progressively tightened to the recommended torque (see Table 1).

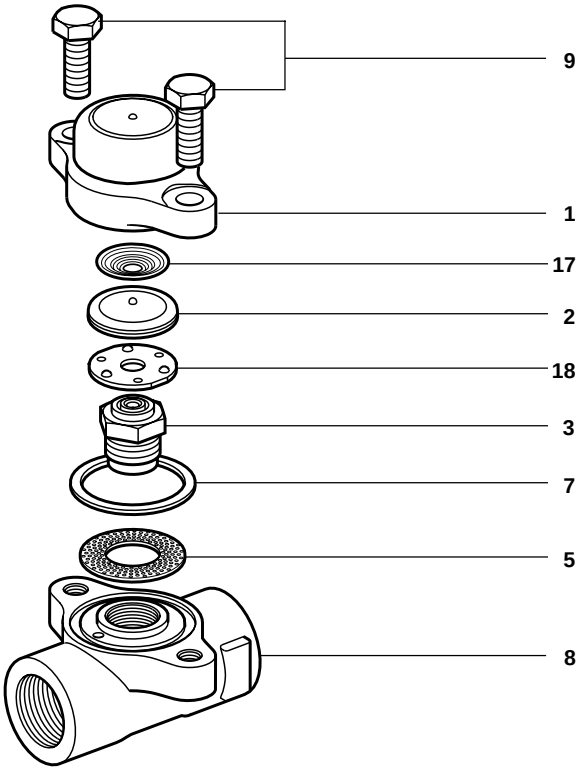

Fig. 3

Table 1 Recommended tightening torques

Item	Part	or mm		N m	(lbf ft)
3	Valve seat	24 A/F		115 - 125	(82 - 89)
9	Cover bolts	16 A/F	M10 x 30	23 - 27	(16 - 19)

7. Spare parts

The spare parts available are shown in heavy outline. Parts drawn in a broken line are not supplied as spares.

Available spares

Capsule and seat assembly set		**2, 3, 17, 18**
Strainer screen	(packet of 3)	**5**
Set of cover gaskets	(packet of 3)	**7**

How to order spares

Always order spares by using the description given in the column headed 'Available spares' and state the size and type of air vent.

Example: 1 - Capsule and seat assembly set for a Spirax Sarco DN25 AVS32 air vent.

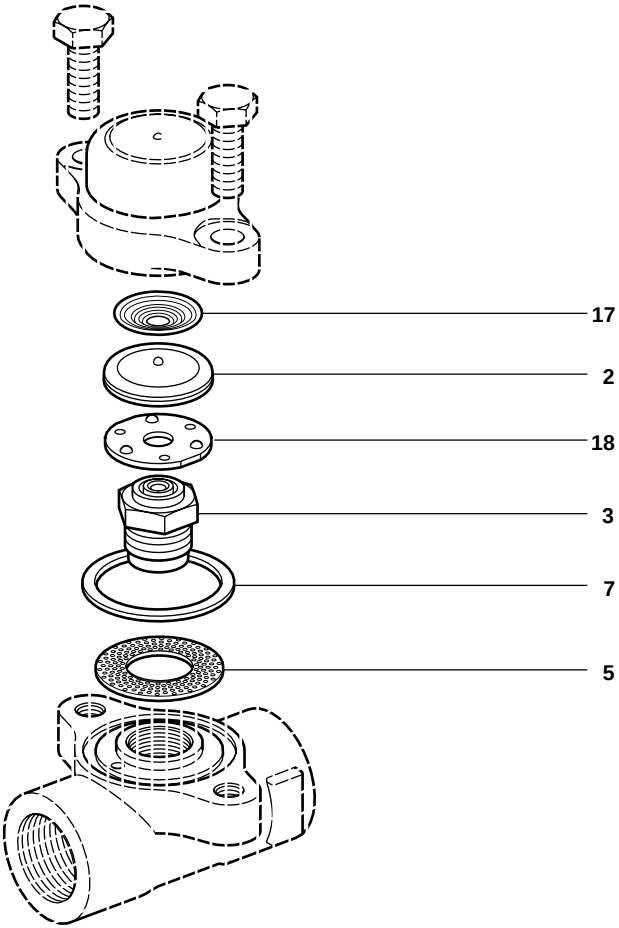

Fig. 4