Fig 4, Fig 5 and Fig 6 Screwed Strainers

Installation and Maintenance Instructions

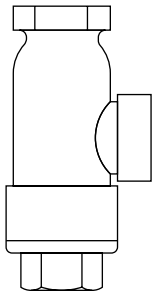

Fig 4
Fig 6

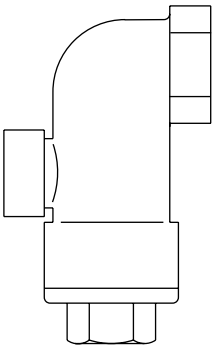

Fig 5

1. General safety information

2. General product information

3. Installation

4. Commissioning

5. Operation

6. Maintenance

7. Spare parts

8. Fault finding

1. General safety information

Safe operation of these units can only be guaranteed if they are properly installed, commissioned and maintained by a qualified person (see Section 11 of the attached Supplementary Safety Information) in compliance with the operating instructions. General installation and safety instructions for pipeline and plant construction, as well as the proper use of tools and safety equipment must also be complied with.

Warning

The cover gasket contains a thin stainless steel support ring which may cause physical injury if not handled and disposed of carefully.

Isolation

Consider whether closing isolating valves will put any other part of the system or personnel at risk. Dangers might include; isolation of vents and protective devices or alarms. Ensure isolation valves are turned off in a gradual way to avoid system shocks.

Pressure

Before attempting any maintenance consider what is or may have been in the pipeline. Ensure that any pressure is isolated and safely vented to atmospheric pressure before attempting to maintain the product, this is easily achieved by fitting Spirax Sarco depressurisation valves type DV (see separate literature for details). Do not assume that the system is depressurised even when a pressure gauge indicates zero.

Temperature

Allow time for temperature to normalise after isolation to avoid the danger of burns and consider whether protective clothing (including safety glasses) is required.

Disposal

These products are recyclable. No ecological hazard is anticipated with the disposal of these products providing due care is taken.

2. General product information

2.1 Description

The Fig 4, Fig 5 and Fig 6 are brass screwed strainers. The Fig 4 and Fig 6 are angle type and the Fig 5 is a straight type strainer. The standard stainless steel screen for all types is 0.8 mm perforations. Other options are available as detailed in Section 2.2.

Note: For additional information see Technical Information Sheet TI-P164-01.

2.2 Optional extras

Strainer screens	**Stainless steel screen**	Perforations	1.6 and 3 mm
		Mesh	40, 100 and 200
	Monel screen	Perforations	0.8 and 3 mm
		Mesh	100

Blowdown or drain valve connections

The cap can be drilled and tapped to the following sizes to enable a blowdown or drain valve to be fitted.

Strainer size	Blowdown valve or drain valve
½", ¾"	½"
1"	¾"

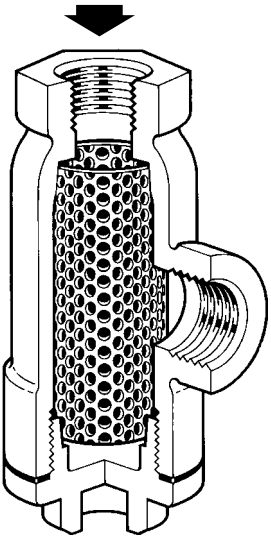

Fig 4

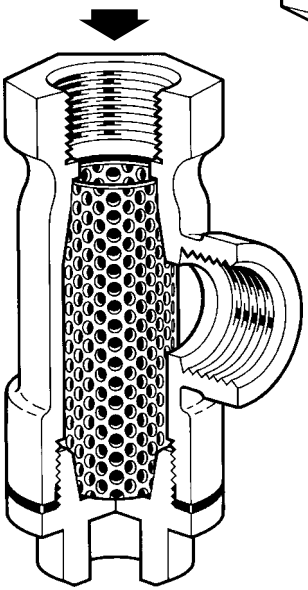

Fig 6

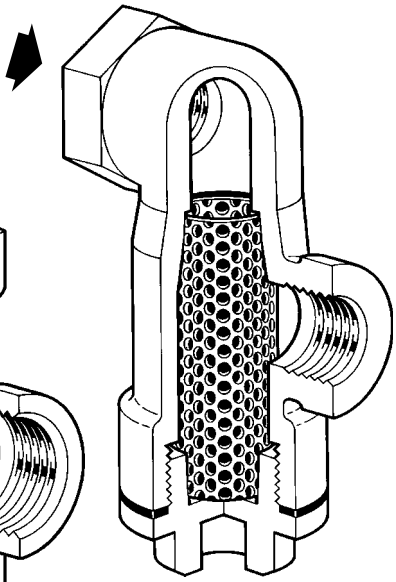

Fig 5

2.3 Limiting conditions (ISO 6552)

	Fig 4 and Fig 5		Fig 6	
Body design conditions	PN16		PN25	
PMA - Maximum allowable pressure	16 bar g	(232 psi g)	25 bar g	(362 psi g)
TMA - Maximum allowable temperature	250°C	(482°F)	250°C	(482°F)
PMO - Maximum operating pressure	13.4 bar g	(194 psi g)	18.5 bar g	(268 psi g)
TMO - Maximum operating temperature	250°C	(482°F)	250°C	(482°F)
Minimum operating temperature	-198°C	(-325°F)	-198°C	(-325°F)
Designed for a maximum cold hydraulic test pressure of:	24 bar g	(348 psi g)	38 bar g	(551 psi g)

2.4 Operating range

Fig 4 and Fig 5

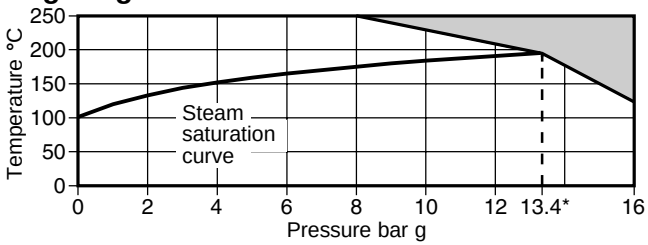

Fig 6

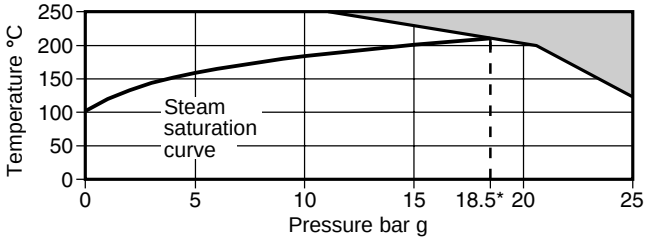

The product must not be used in this region.

***** PMO Maximum operating pressure recommended for saturated steam.

2.5 K_V values

Size	½"	¾"	1"
Perforations 0.8, 1.6, 3 mm	4	4	11
Mesh 40, 100	4	4	11
Mesh 200	4	4	9

For conversion C_V (UK) = K_V x 0.97 C_V (US) = K_V x 1.17

2.6 Materials

No.	Part	Material	
1	Body	Brass	BS 2872 CZ 122
2	Cap	Brass	BS 2872 CZ 122
3	Cap gasket	Reinforced exfoliated graphite	
4	Strainer screen	Stainless steel	316 L

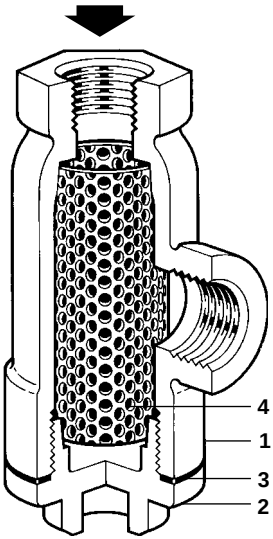

Fig 4

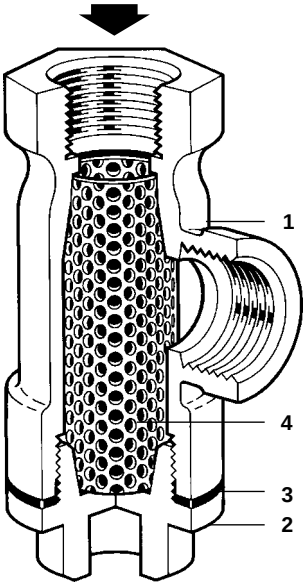

Fig 6

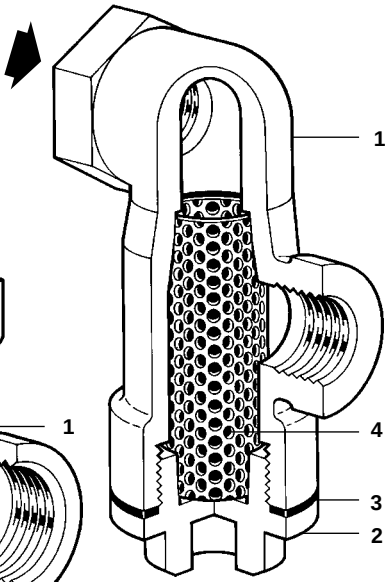

Fig 5

3. Installation

Note: Before actioning any installation observe the 'Safety information' in Section 1.

Referring to the Installation and Maintenance Instructions, name-plate and Technical Information Sheet, check that the product is suitable for the intended installation.

3.1 Check materials, pressure and temperature and their maximum values. If the maximum operating limit of the product is lower than that of the system in which it is being fitted, ensure that a safety device is included in the system to prevent overpressurisation.

3.2 Determine the correct installation situation and the direction of fluid flow.

3.3 Remove the protective covers from all connections.

3.4 The strainer should be installed with the strainer cap at the bottom with the inlet at the top on Figs 4 and 6, and at the side on Fig 5.

4. Commissioning

After installation or maintenance ensure that the system is fully functional. Carry out tests on any alarms or protective devices.

5. Operation

Strainers are passive items and will prevent the onward movement of dirt and debris, which is larger than the holes in the screen. The pressure drop across the strainer will increase as the screen becomes blocked. Regular cleaning / blowdown is recommended to keep the screen clean.

6. Maintenance

Note: Before actioning any maintenance programme observe the 'Safety information' in Section 1.

Warning

The cover gasket contains a thin stainless steel support ring which may cause physical injury if not handled and disposed of carefully.

6.1 General information

Before undertaking any maintenance on the strainer, it must be isolated from both the supply line and return line and any pressure allowed to safely normalise to atmosphere. The strainer should then be allowed to cool. When reassembling, ensure that all joint faces are clean.

6.2 How to clean or replace the strainer screen:

- Remove the strainer cap.
- Once the cap is removed the strainer screen can be taken out.
- Clean the screen or replace with a new one.
- Reassemble the screen into the cap by pushing the end into the recess.
- Always fit a new strainer cap gasket ensuring the jointing faces are clean.
- Refit the strainer cap and tighten to the recommended torque (See Table 1).
- Check for leaks.

Table 1 Recommended tightening torques

Item	Product size		 or mm		N m	(lbf ft)
2 Strainer cap	Fig 4	½" and ¾"	26 A / F	1" BSP	42 - 48	(30 - 35)
	Fig 5	½" and ¾"	26 A / F	1" BSP	42 - 48	(30 - 35)
	Fig 6	½" and ¾"	26 A / F	1¼" BSP	70 - 80	(51 - 59)
		1"	34 A / F	1¾" BSP	124 - 144	(91 - 105)

7. Spare parts

The spare parts available are shown in heavy outline. Parts drawn in broken line are not supplied as spares.

Available spares

Strainer screen (state material, mesh, perforation and size of strainer)	**4**
Cap gasket (packet of three)	**3**

How to order spares

Always order spares by using the description given in the column headed 'Available spares' and state the size, model no. and pressure rating of the trap.

Example: 1 off 0.8 mm perforated stainless steel screen for a ½" Spirax Sarco Fig 5 strainer.

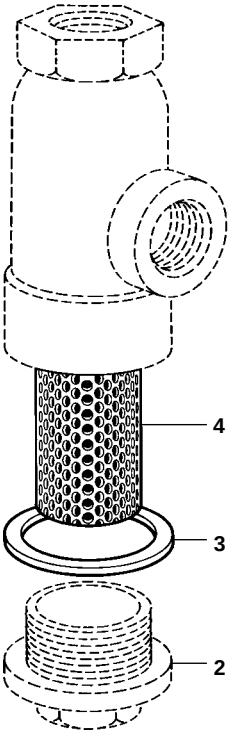

Fig 4

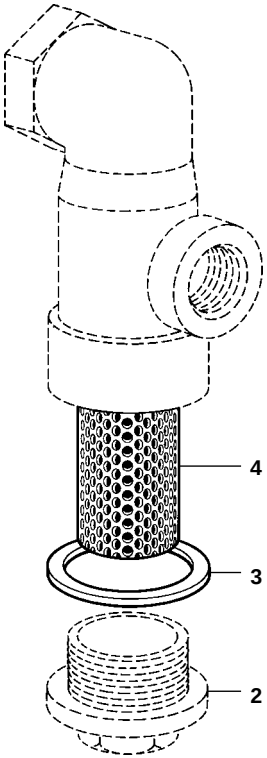

Fig 5

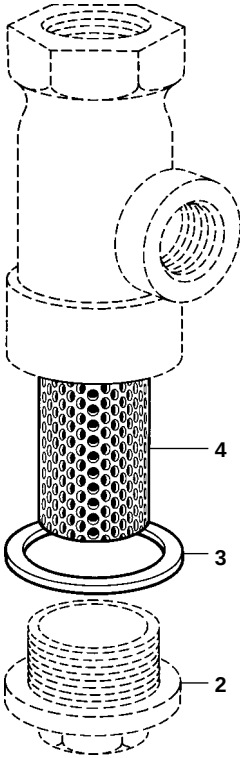

Fig 6

8. Fault finding

Symptom	Possible cause	Remedy
No flow through strainer	Blocked screen	Clean or replace screen
	System is isolated	Check isolation valves
Increased pressure drop across strainer	Screen is blocked up	Clean or replace screen